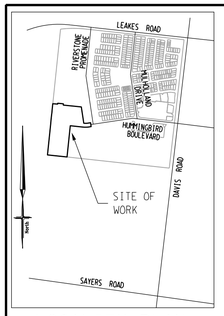

LOCALITY PLAN

SCALE 1:20,000

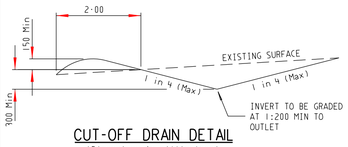

CUT-OFF DRAIN DETAIL

(Dimensions in millimetres)
(N.T.S.)

INSET

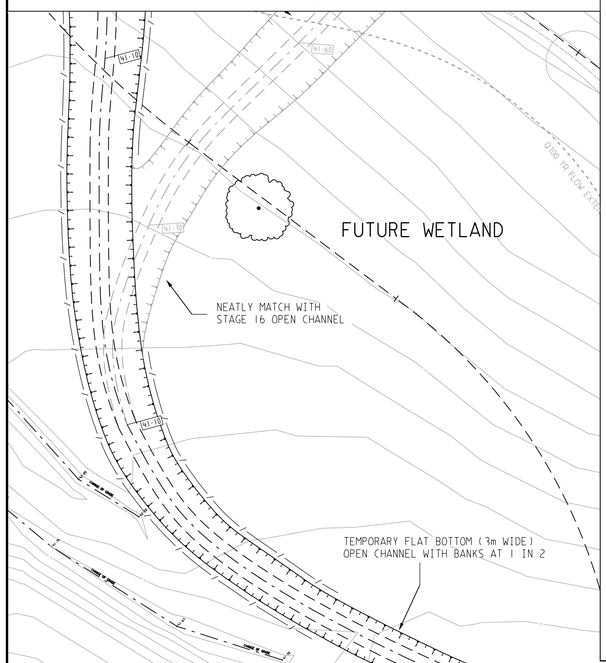

WARNING

BEWARE OF UNDERGROUND SERVICES

THE LOCATIONS OF UNDERGROUND SERVICES ARE APPROXIMATE ONLY AND THEIR EXACT POSITION SHOULD BE PROVEN ON SITE. NO GUARANTEE IS GIVEN THAT ALL EXISTING SERVICES ARE SHOWN.

ATTENTION TO CONTRACTOR

1. **IT IS THE CONTRACTORS RESPONSIBILITY TO ENSURE THAT THE DIGITAL PLAN, PROVIDED FOR SETOUT PURPOSES, MATCHES THE TBM COORDINATES SHOWN.**
2. **Contractor to ensure that the site is pegged and or set out checked by the licenced surveyor responsible for certifying the Plan of Subdivision prior to underground Infrastructure being Installed.**
3. Where concrete works abut a sewer access chamber surround or similar structure, an expansion joint of approved material shall be provided between the two faces.

SHEET INDEX

SHT No.	VER	DESCRIPTION
1	N	DETAIL PLAN No.1, LOCALITY PLAN & SERVICE OFFSETS
1A	B	DETAIL PLAN No.2
2	C	GENERAL NOTES, SPEED HUMP DETAIL & TYPICAL SECTIONS
3	E	INTERSECTION DETAILS No.1
4	A	INTERSECTION DETAILS No.2
5	B	HUMMINGBIRD BOULEVARD - LONGITUDINAL SECTION
6	D	HUMMINGBIRD BOULEVARD - CROSS SECTIONS No.1
7	A	HUMMINGBIRD BOULEVARD - CROSS SECTIONS No.2
8	A	HUMMINGBIRD BOULEVARD - CROSS SECTIONS No.3
9	A	HOUDINI DRIVE - LONGITUDINAL SECTION
10	A	HOUDINI DRIVE - CROSS SECTIONS
11	A	GELLER CIRCUIT - LONGITUDINAL SECTION
12	A	GELLER CIRCUIT - CROSS SECTIONS
13	A	GRANADA DR & FIRMONA AVE - LONGITUDINAL & CROSS SECTIONS
14	D	DRAINAGE LONGITUDINAL SECTIONS No.1 & PIT SCHEDULE
15	A	DRAINAGE LONGITUDINAL SECTIONS No.2
16	A	DRAINAGE LONGITUDINAL SECTIONS No.3
17	D	DRAINAGE LONGITUDINAL SECTIONS No.4
18	D	PIT STRUCTURAL DETAILS
19	D	SIGNAGE & LINEMARKING PLAN
20	D	CULVERT DETAIL
21	E	CULVERT STRUCTURAL DETAILS

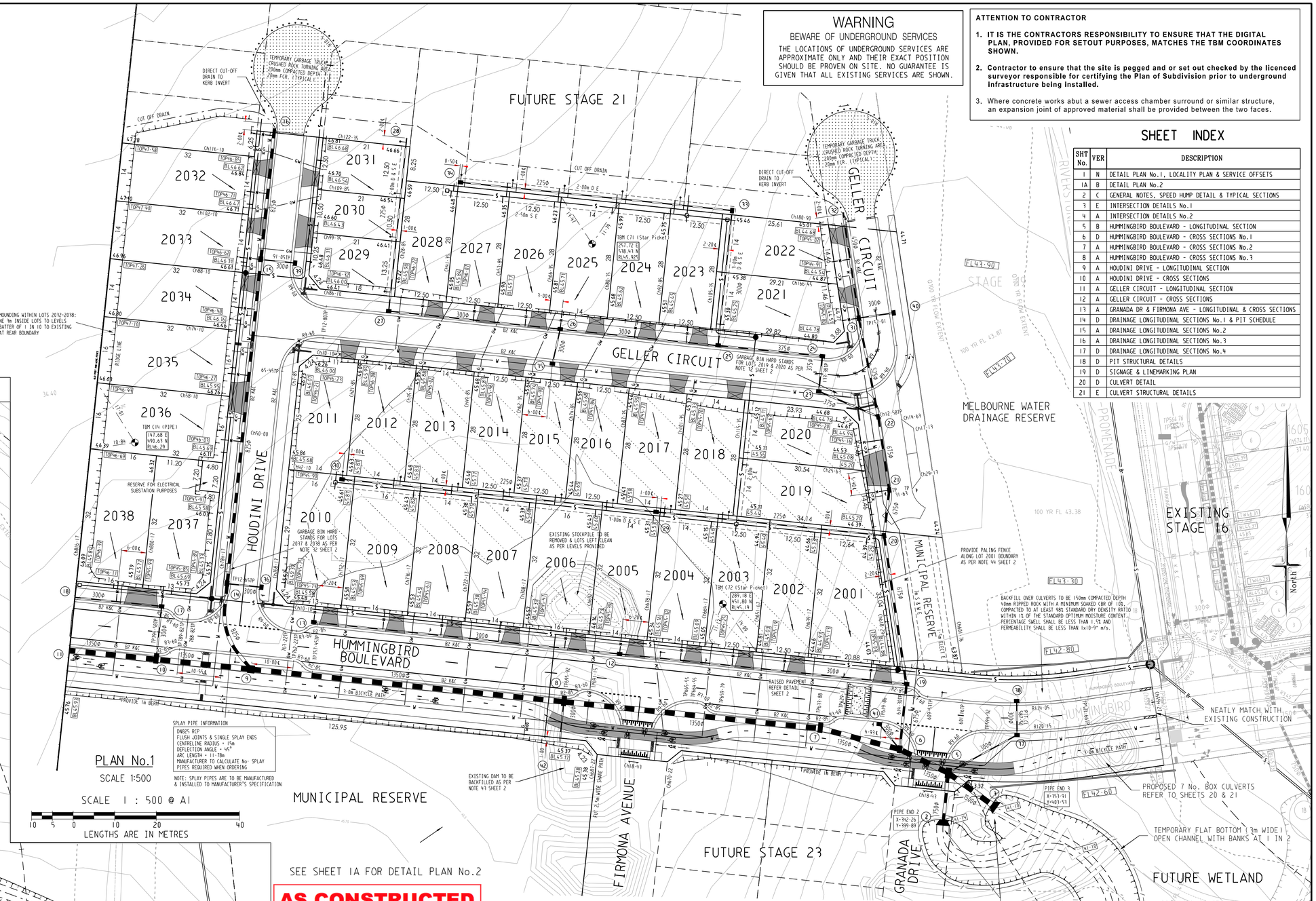

PLAN No.1

SCALE 1:500

SCALE 1 : 500 @ A1

10 5 0 10 20 40

LENGTHS ARE IN METRES

SPLAY PIPE INFORMATION
DN825 RCP
FLUSH JOINTS & SINGLE SPLAY ENDS
CENTRELINE RADIUS = 15m
DEFLECTION ANGLE = 45°
ARC LENGTH = 10.78m
MANUFACTURER TO CALCULATE No. SPLAY PIPES REQUIRED WHEN ORDERING

NOTE: SPLAY PIPES ARE TO BE MANUFACTURED & INSTALLED TO MANUFACTURER'S SPECIFICATION

AS CONSTRUCTED

SERVICES OFFSETS AND LOCATIONS

STREET NAME	Rd.RESERVE	WATER DW	WATER NDW	GAS	ELECTRICITY CABLES	ELECTRICITY POLES	FIBRE TO THE HOME FTTH CABLES	FIBRE TO THE HOME FTTH PITS	Bk. of KERB	JOINT TRENCHING	STREET CLASIFICATION
HUMMINGBIRD BOULEVARD (AT CULVERTS)	25·50	9·85 S	9·00 S	8·25 S	2·60 N	1·00 BOK	1·85 N	-	11·75 S 4·35 N	G & W, FTTH & E	CONNECTOR ROAD
HUMMINGBIRD BOULEVARD (LOTS 2001-2038)	25·50	3·80 S	2·90 S	2·20 S	2·60 N	1·00 BOK	1·85 N	-	9·65 S 4·35 N	G & W, FTTH & E	CONNECTOR ROAD
HOUDINI DRIVE	16·00	3·20 W	2·70 W	2·20 W	2·50 E	1·00 BOK	1·80 E	1·80 W	4·05 E 4·35 W	G & W, FTTH & E	STREET - LEVEL 1
GELLER CIRCUIT	16·00	3·20 S & W	2·70 S & W	2·20 S & W	2·45 N & E	1·00 BOK	1·85 N & E	1·80 S & W	4·05 N & E 4·35 S & W	G & W, FTTH & E	STREET - LEVEL 1
GELLER CIRCUIT (LOT 2019,2020)	16·00	3·20 W	2·70 W	2·20 W	2·50 E	-	1·85 E	1·80 W	-	G & W, FTTH & E	-
GRANADA DRIVE	16·00	3·20 W	2·70 W	2·20 W	1·05 E	1·00 BOK	0·30 E	1·80 W	4·35 W 2·55 E	G & W, FTTH & E	STREET - LEVEL 1
FIRMONA AVENUE	16·00	3·20 E	2·70 E	2·20 E	3·60 W	1·00 BOK	2·85 W	1·80 E	4·35 E 5·05 W	G & W, FTTH & E	STREET - LEVEL 1
RESERVE (ADJACENT LOT 2001)	16·00	6·00 W	5·50 W	5·00 W	2·50 E	-	-	-	-	G & W	-

SYMBOL LEGEND

	Prop	Exist
Drains		
Sewer <300	S	S
Sewer >300	S	S
Water	W	W
House Drain	H	H
Property Inlet		
Street Sign		
PSM		
Retaining Wall		
Conduits 50mm	GW	GW
Conduits 100mm	W100	W100
Ex Gas/Elect/Tel	G E T	

Ex/Natural/FS Level	28·57 N528·57 28·18
FS @ Building Line	BL28·57
Top/Toe of Batter	TOP28·57 TOE28·57
Top Ret. Wall Level	TW28·57
100yr Flood Level	FL28·57
Fill Prop/Ex (> 0.2m depth)	
Cut Prop/Ex (> 0.2m depth)	

VER	DATE	REMARKS
N	25/05/20	BUS STOP PAD REMOVED AS PER TFV INSTRUCTION: SHEET INDEX UPDATED
M	20/05/20	NORTH BUS STOP PAD REMOVED, SOUTH PAD MOVED WEST, PAD DETAIL REMOVED:SHEET INDEX UPDATED
L	13/05/20	BUS STOP PADS & DETAIL ADDED, SHEET INDEX UPDATED
K	7/04/20	SHEET INDEX UPDATED
J	28/01/20	SHEET INDEX UPDATED
I	30/10/19	SHEET INDEX UPDATED
H	24/10/19	SERVICES ADDED TO MUNICIPAL RESERVE, SHEET INDEX UPDATED

AMENDMENTS

breese pitt dixon pty. ltd.
land surveyors civil engineers
1/19 cato street
hawthorn east, 3123
telephone 8823 2300
fax no. 8823 2310

MELWAY REF.	234-F-2
SURVEY	BPD
DESIGN	NC
DRAWN	NC
CHECKED	

RIVERDALE VILLAGE STAGE 20

MUNICIPALITY: WYNDHAM

REFERENCE: 8554 E/20

SCALE: AS SHOWN | DATUM: AHD | DATE: JUN'18 | SHEET 1 OF 21 | N

Plot Date: 25/05/2020

I:\W8554\ENGS\T20\E20_R01_DET.dgn

SEE SHEET 1 FOR CONTINUATION

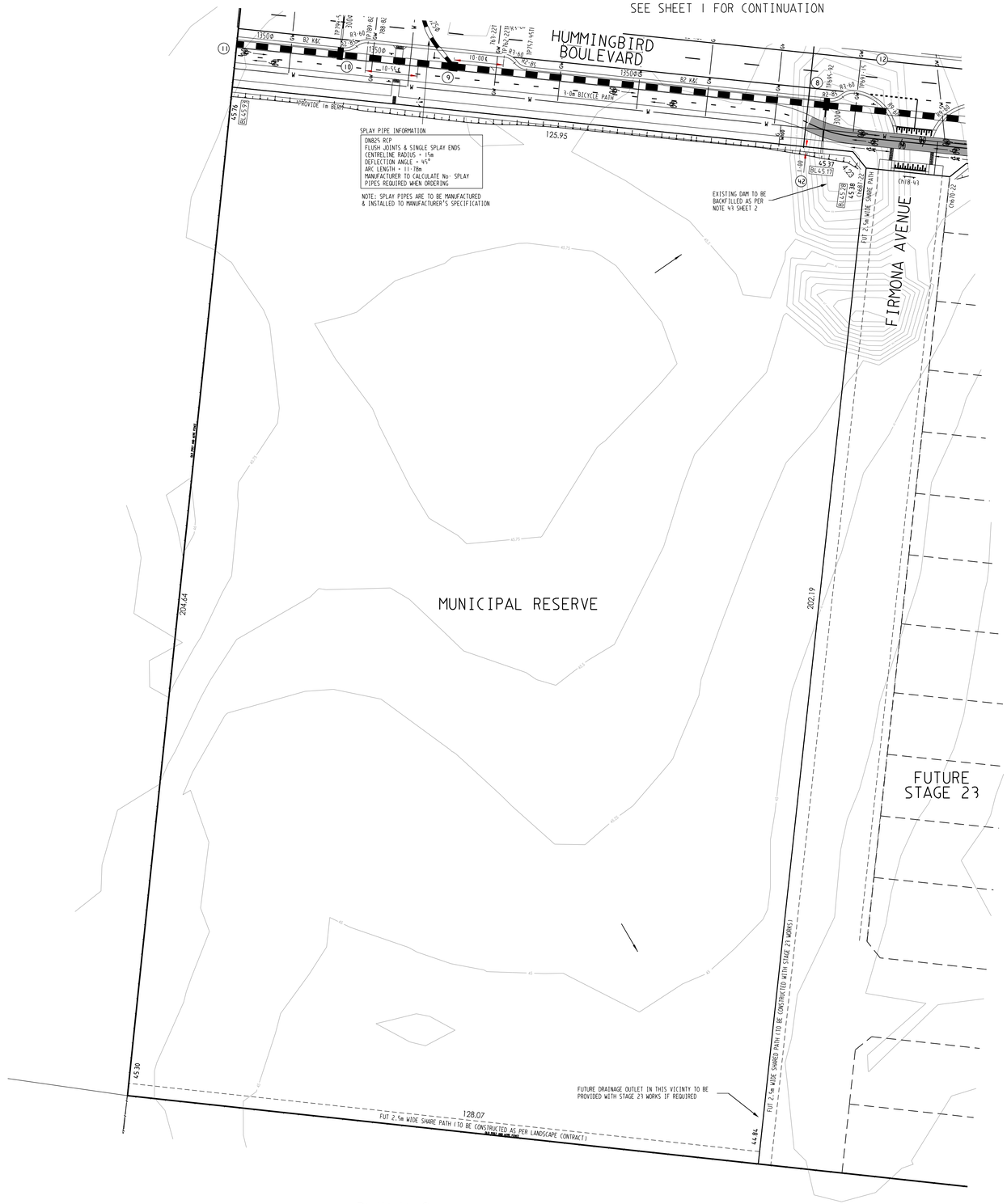

PLAN No.2

SCALE 1:500

AS CONSTRUCTED

SCALE 1 : 500

10 5 0 10 20 40

LENGTHS ARE IN METRES

SYMBOL LEGEND

	Prop	Exist
Drains		
Sewer <300	S	S
Sewer >300	S	S
Water	W	W
House Drain	H	H
Property Inlet		
Street Sign		
PSM		
Rock Ret Wall		
Sleeper Ret Wall		
Conduits 50mm	GW	GW
Conduits 100mm	W100	W100
Ex Gas/Elect/Tel	G E T	

Ex/Natural/FS Level	+28.57 +N528.57 28.57
FS @ Building Line	BL28.57
Top/Toe of Batter	TOP28.57 TOE28.57
Top Ret. Wall Level	TW28.57
100yr Flood Level	FL28.57
Fill Prop/Ex (> 0.2m depth)	
Cut Prop/Ex (> 0.2m depth)	

AMENDMENTS

VER.	DATE	REMARKS
B	24/10/19	SERVICES TO RESERVE & FUTURE SHARED PATH ADDED
A	10/09/19	SHEET CREATION TO SHOW MUNICIPAL RESERVE

breese pitt dixon pty. ltd.
land surveyors civil engineers
1/19 cato street
hawthorn east, 3123
telephone 8823 2300
fax no. 8823 2310

MELWAY REF.	234-F-2
SURVEY	BPD
DESIGN	NC
DRAWN	NC
CHECKED	

RIVERDALE VILLAGE STAGE 20

SCALE	AS SHOWN	DATUM	AHD	DATE	JUN'18

MUNICIPALITY: WYNDHAM

REFERENCE: 8554 E/20

SHEET 1A OF 21 B

Plotted:25/10/2019

I:\H8554\ENG\ST20\E20_R01A_DET2.dgn

GENERAL NOTES

1. ALL WORKS TO BE CARRIED OUT IN ACCORDANCE WITH VICTORIAN PLANNING AUTHORITY (VPA) ENGINEERING DESIGN AND CONSTRUCTION MANUAL FOR SUBDIVISION AND WYNDHAM CITY COUNCIL PLANS AND SPECIFICATIONS APPROVED BY COUNCIL AND TO THE SATISFACTION OF THE DIRECTOR ENGINEERING SERVICES OR HIS REPRESENTATIVE.

2. COUNCIL AND ALL SERVICE AUTHORITIES TO BE NOTIFIED 7 CLEAR DAYS PRIOR TO COMMENCEMENT OF WORKS.

3. DRAINAGE AND PITS TO BE SET OUT FROM OFFSETS SHOWN RATHER THAN FROM PIPE CHAINAGES.

4. PROPERTY INLETS ARE TO BE PLACED 1.0m FROM THE LOW CORNER OF LOT UNLESS OTHERWISE SHOWN.

5. LOTS DENOTED THUS 31H ARE TO BE PROVIDED WITH A 100mm. DIA. HOUSE DRAIN PLACED 5.5m FROM LOW CORNER OF LOT UNLESS SHOWN OTHERWISE. HOUSE DRAIN TO BE CONNECTED TO STORMWATER DRAINS IF PRESENT. COVER AT THE BUILDING LINE TO BE MINIMUM OF 600mm.

6. ALL PIPES UNDER ROAD PAVEMENTS TO BE RRJ RCP (REFER DRAINAGE LONGITUDINAL SECTIONS FOR RELEVANT PIPE CLASS). ALL OTHER PIPES TO BE RRJ RCP CLASS 2.

7. DRAINAGE PIPES LAID ON A CURVE MUST BE RRJ AND THE RADIUS OF CURVATURE COMPLY WITH THE MANUFACTURERS SPECIFICATIONS.
DRAINAGE PIPES LAID ON A CURVE SHALL HAVE THE BUILDING LINE PEGGED AT MINIMUM 15m INTERVALS.

8. ALL SEWER MAINS, CONDUITS & PIPES UNDER ROAD PAVEMENT, CONCRETE DRIVEWAYS, FOOTPATHS AND PARKING BAYS ARE TO BE BACKFILLED WITH 20mm CLASS 2 BASALTIC FCR COMPACTED TO THE SATISFACTION OF THE DIRECTOR ENGINEERING SERVICES OR HIS REPRESENTATIVE. WHERE SEWER MAINS ARE ADJACENT TO STORMWATER PIPELINES THE BACKFILL OF THE DEEPER TRENCH SHALL BE IN ACCORDANCE WITH COUNCILS STANDARD DRAWING SD6-10 (1996)

9. DRAINAGE PIPES BEHIND BACK OF KERB TO BE BACKFILLED WITH 20mm. CLASS 3 BASALTIC ROCK COMPACTED TO THE SATISFACTION OF THE DIRECTOR ENGINEERING SERVICES OR HIS REPRESENTATIVE.

10. AGRICULTURAL PIPE DRAINS TO BE PLACED BEHIND ALL KERB AND CHANNEL, KERB ONLY AND EDGE STRIPS. REFER TO VPA STANDARD DRAWING EDCM 202.

11. PRIOR TO COMMENCEMENT OF WORKS ON SITE, THE CONTRACTOR MUST ENSURE THAT ALL MATTERS RELATING TO THE OCCUPATIONAL HEALTH AND SAFETY ACT 2004, INCLUDING ALL RELEVANT REGULATIONS, HAVE BEEN ADDRESSED. IN PARTICULAR, THE REQUIRED NOTIFICATIONS MUST BE CONVEYED TO THE VICTORIAN WORKCOVER AUTHORITY - HEALTH & SAFETY DIVISION WITH RESPECT TO TRENCHING OPERATIONS. DETAILS OF THE CONTRACTORS OCCUPATIONAL HEALTH & SAFETY PROCEDURES MUST BE LODGED WITH THE DIRECTOR ENGINEERING SERVICES OR HIS REPRESENTATIVE PRIOR TO COMMENCEMENT OF WORKS.

12. BATTERS SHALL BE IN 1 IN 6 FOR CUT AND FILL UNLESS OTHERWISE SHOWN.

13. PRIOR TO COMMENCEMENT OF WORKS,THE CONTRACTOR SHALL PROVIDE THE FOLLOWING INFORMATION:
    a) SOURCE OF QUARRY MATERIAL.
    b) OPTIMUM MOISTURE CONTENT AND MAXIMUM MODIFIED DRY DENSITY OF THE F.C.R. TO BE USED (FROM NATA APPROVED LABORATORY).
    c) IF THE SOURCE OF THE QUARRY MATERIAL IS CHANGED DURING THE COURSE OF WORKS, NEW TEST RESULTS SHALL BE PROVIDED.

14. NO TOP SOIL SHALL BE REMOVED FROM LAND COVERED BY THE SUBDIVISION WITHOUT THE WRITTEN CONSENT OF THE DIRECTOR ENGINEERING SERVICES OR HIS REPRESENTATIVE. THE TRUCK ROUTE FOR REMOVAL OF SPOIL FROM SITE IS TO BE SUBMITTED TO AND APPROVED BY THE DIRECTOR ENGINEERING SERVICES OR HIS REPRESENTATIVE IN WRITING PRIOR TO COMMENCEMENT OF ANY WORK.

15. ON COMPLETION THE CONTRACTOR IS RESPONSIBLE FOR THE REMOVAL OF ALL RUBBISH AND SPOIL FROM THE SITE.

16. THE CONTRACTOR SHALL ERECT AND MAINTAIN ALL NECESSARY SHORING AND PLANKING AND STRUTTING, DEWATERING DEVICES, BARRICADES, SIGNS, LIGHTS ETC. NECESSARY TO KEEP THE WORKS IN A SAFE AND STABLE CONDITION AND PROTECT THE PUBLIC FROM THE WORK AS PER AUSTRALIAN STANDARD AS1742.1.2.3 -1986.

17. REMOVAL OR RETENTION OF EXISTING TREES OR VEGETATION MUST BE IN ACCORDANCE WITH THE APPROVED LANDSCAPE PLANS. NO MATERIAL IS TO BE BURNT ON SITE.

18. ANY FOOTPATH OR KERB AND CHANNEL DAMAGED DURING CONSTRUCTION AND MAINTENANCE PERIOD TO BE REINSTATED TO THE SATISFACTION OF THE DIRECTOR ENGINEERING SERVICES OR HIS REPRESENTATIVE.

19. LOTS TO BE GRADED TO THE SATISFACTION OF THE DIRECTOR ENGINEERING SERVICES OR HIS REPRESENTATIVE. ALL LOTS TO BE 1 IN 150 MINIMUM SLOPE FRONT TO REAR OR REAR TO FRONT.

20. FILL AREAS TO BE STRIPPED OF TOPSOIL, FILLED USING APPROVED CLAY FILL, AND TOPSOIL REPLACED TO OBTAIN FINAL FILL LEVELS AS SHOWN ON PLANS. ALL FILLING TO BE CARRIED OUT IN 150mm LAYERS AND COMPACTED TO 95% OF MAXIMUM DRY DENSITY IN ACCORDANCE WITH AS3798-2007, SECTION 8.2, LEVEL 1 ("GUIDELINES ON EARTHWORKS FOR COMMERCIAL AND RESIDENTIAL DEVELOPMENTS"). ON COMPLETION THE CONTRACTOR SHALL PRESENT A "LEVEL 1" TYPED REPORT, FROM A NATA REGISTERED SOIL TESTING LABORATORY, NOMINATING THE EXTENT OF FILL PLACED, ITS CONFORMANCE WITH THE SPECIFICATION AND ITS CLASSIFICATION AS "CONTROLLED FILL". IF ANY SUBSTANDARD FILLING IS ENCOUNTERED ON THE SITE IT MUST BE REMOVED AND REPLACED WITH APPROVED FILL MATERIAL PROPERLY COMPACTED TO COUNCIL REQUIREMENTS. A GEO-TECHNICAL REPORT MUST BE SUBMITTED SHOWING DETAILS OF DEPTH, TYPE OF MATERIAL AND DENSITY OF THE FILL AREAS CONCERNED.

21. THE CONTRACTOR IS RESPONSIBLE FOR ENSURING THAT ALL IMPORTED FILL MATERIAL, INCLUDING TOPSOIL, SATISFIES THE DESCRIPTION FOR CLEAN FILL MATERIAL IN EPA BULLETIN PUBLICATION No. 448 (SEPT '95) AND SUBSEQUENT REVISIONS. THE CONTRACTOR SHALL PROVIDE VERIFICATION INCLUDING TEST CERTIFICATES TO THE DIRECTOR ENGINEERING SERVICES OR HIS REPRESENTATIVE.

22. WHERE WORKS ARE IN THE VICINITY OF EXISTING SERVICES THESE SERVICES ARE TO BE LOCATED AND THE VARIOUS AUTHORITIES NOTIFIED PRIOR TO THE COMMENCEMENT OF WORKS.

23. THE WATER CONDUIT OFFSET FROM THE LOT BOUNDARY IS GIVEN ON THE WATER RETICULATION PLAN. THE CONTRACTOR MUST CONSTRUCT CONDUITS TO ACCORD WITH THE GIVEN OFFSET AND ENSURE THAT THE CONCRETER MARKS THE KERB AND FOOTPATH EXACTLY ABOVE THE CONDUIT.

24. TELSTRA/NBN Co TO BE NOTIFIED 7 DAYS PRIOR TO CONCRETE WORKS BEING PLACED.

25. ALL DRIVEWAYS TO BE OFFSET 0.75m FROM SIDE BOUNDARY OR EASEMENT UNLESS OTHERWISE SHOWN. REFER TO COUNCIL STD.DWG. SD4-1.

26. THE CONTRACTOR IS TO ARRANGE CCTV OF DRAINAGE AND ACCEPTANCE FROM COUNCIL PRIOR TO INSTALLATION OF THE KERB & CHANNEL AND ASPHALT PLACEMENT.

27. 600 B2 PROFILE KERB AND CHANNEL TO BE CONSTRUCTED IN ALL STREET UNLESS OTHERWISE SHOWN.

28. PSM's TO BE HIGH STABILITY TYPE, REFER TO COUNCIL STANDARD DRAWING SD11-10. MGA CO-ORDINATES AND AHD LEVEL TO BE SUPPLIED TO COUNCIL.

29. - HUMMINGBIRD BOULEVARD ROAD PAVEMENT TO CONSIST OF:
    a) 40mm COMPACTED DEPTH 14mm NOMINAL SIZE TYPE 'H' ASPHALT WITH C320 BINDER. (ASPHALT TO BE 5mm PROUD OF LIP OF KERB)
    b) 80mm COMPACTED DEPTH 20mm NOMINAL SIZE TYPE 'SI' ASPHALT WITH C320 BINDER.
    c) 75mm COMPACTED DEPTH 20mm NOMINAL SIZE TYPE 'SF' ASPHALT WITH C320 BINDER.
    d) 100mm COMPACTED DEPTH 20mm NOMINAL SIZE CLASS 3 CEMENT TREATED CRUSHED ROCK COMPACTED TO AT LEAST 98% MODIFIED DRY DENSITY RATIO WITHIN 2% OF THE OPTIMUM MOISTURE CONTENT WITH A MINIMUM YOUNG'S MODULUS OF 500 MPa.
    e) 100mm COMPACTED DEPTH 20mm NOMINAL SIZE CLASS 4 CRUSHED ROCK COMPACTED TO AT LEAST 95% MODIFIED DRY DENSITY RATIO WITHIN 1% OF THE MODIFIED OPTIMUM MOISTURE CONTENT WITH A MINIMUM YOUNG'S MODULUS OF 500 MPa.
    f) 250mm COMPACTED DEPTH 40mm RIPPED ROCK WITH A MINIMUM SOAKED CBR OF 10%, COMPACTED TO AT LEAST 98% STANDARD DRY DENSITY RATIO WITHIN 1% OF THE STANDARD OPTIMUM MOISTURE CONTENT. PERCENTAGE SWELL SHALL BE LESS THAN 1.5% AND PERMEABILITY SHALL BE LESS THAN 1×10^{-9} m/s.

    TOTAL PAVEMENT DEPTH 645mm

    - HOUDINI DRIVE PAVEMENT TO CONSIST OF:
    a) 30mm COMPACTED DEPTH 10mm NOMINAL SIZE TYPE 'N' ASPHALT WITH C170 BINDER. (ASPHALT TO BE 5mm PROUD OF LIP OF KERB)
    b) 30mm COMPACTED DEPTH 10mm NOMINAL SIZE TYPE 'N' ASPHALT WITH C170 BINDER.
    c) 10mm SAMI SEAL WITH CLASS S18RF BINDER & BITUMINOUS PRIME.
    d) 130mm COMPACTED DEPTH 20mm NOMINAL SIZE CLASS 2 FCR COMPACTED TO AT LEAST 100% CHARACTERISTIC MODIFIED DRY DENSITY RATIO WITHIN 1% OF THE MODIFIED OPTIMUM MOISTURE CONTENT.
    e) 100mm COMPACTED DEPTH 20mm NOMINAL SIZE CLASS 3 FCR COMPACTED TO AT LEAST 98% CHARACTERISTIC MODIFIED DRY DENSITY RATIO WITHIN 1% OF THE MODIFIED OPTIMUM MOISTURE CONTENT.
    f) 110mm COMPACTED DEPTH 20mm NOMINAL SIZE CLASS 4 FCR COMPACTED TO AT LEAST 98% CHARACTERISTIC MODIFIED DRY DENSITY RATIO WITHIN 1% OF THE MODIFIED OPTIMUM MOISTURE CONTENT.
    g) 220mm COMPACTED DEPTH 40mm RIPPED ROCK WITH A MINIMUM SOAKED CBR OF 10%, COMPACTED TO AT LEAST 98% STANDARD DRY DENSITY RATIO WITH A MEAN VALUE OF AT LEAST 100% STANDARD DRY DENSITY RATIO & WITHIN 1% OF THE STANDARD OPTIMUM MOISTURE CONTENT & A PERCENTAGE SWELL OF LESS THAN 1.5%

    TOTAL PAVEMENT DEPTH 630mm

    - GELLER CIRCUIT PAVEMENT TO CONSIST OF:
    a) 20mm COMPACTED DEPTH 7mm NOMINAL SIZE TYPE 'L' ASPHALT WITH C170 BINDER. (ASPHALT TO BE 5mm PROUD OF LIP OF KERB)
    b) 30mm COMPACTED DEPTH 10mm NOMINAL SIZE TYPE 'N' ASPHALT WITH C170 BINDER.
    c) 10mm SAMI SEAL WITH CLASS S18RF BINDER & BITUMINOUS PRIME.
    d) 140mm COMPACTED DEPTH 20mm NOMINAL SIZE CLASS 2 FCR COMPACTED TO AT LEAST 98% MODIFIED DRY DENSITY RATIO WITH A MEAN VALUE OF AT LEAST 100% MODIFIED DRY DENSITY RATIO & WITHIN 1% OF THE MODIFIED OPTIMUM MOISTURE CONTENT.
    e) 120mm COMPACTED DEPTH 20mm NOMINAL SIZE CLASS 3 FCR COMPACTED TO AT LEAST 95% MODIFIED DRY DENSITY RATIO WITH A MEAN VALUE OF AT LEAST 98% MODIFIED DRY DENSITY RATIO & WITHIN 1% OF THE MODIFED OPTIMUM MOISTURE CONTENT.
    f) 200mm COMPACTED DEPTH 40mm RIPPED ROCK WITH A MINIMUM SOAKED CBR OF 10%, COMPACTED TO AT LEAST 98% STANDARD DRY DENSITY RATIO WITH A MEAN VALUE OF AT LEAST 100% STANDARD DRY DENSITY RATIO & WITHIN 1% OF THE STANDARD OPTIMUM MOISTURE CONTENT & A PERCENTAGE SWELL OF LESS THAN 1.5%

    TOTAL PAVEMENT DEPTH 520mm

    - GRANADA DRIVE & FIRMONA AVENUE PAVEMENT TO CONSIST OF:
    a) 30mm COMPACTED DEPTH 10mm NOMINAL SIZE TYPE 'L' ASPHALT WITH C170 BINDER. (ASPHALT TO BE 5mm PROUD OF LIP OF KERB)
    b) 30mm COMPACTED DEPTH 10mm NOMINAL SIZE TYPE 'N' ASPHALT WITH C170 BINDER.
    c) 10mm SAMI SEAL WITH CLASS S18RF BINDER & BITUMINOUS PRIME.
    d) 130mm COMPACTED DEPTH 20mm NOMINAL SIZE CLASS 2 FCR COMPACTED TO AT LEAST 98% MODIFIED DRY DENSITY RATIO WITH A MEAN VALUE OF AT LEAST 100% MODIFIED DRY DENSITY RATIO & WITHIN 1% OF THE MODIFIED OPTIMUM MOISTURE CONTENT.
    e) 160mm COMPACTED DEPTH 20mm NOMINAL SIZE CLASS 3 FCR COMPACTED TO AT LEAST 95% MODIFIED DRY DENSITY RATIO WITH A MEAN VALUE OF AT LEAST 98% MODIFIED DRY DENSITY RATIO & WITHIN 1% OF THE MODIFED OPTIMUM MOISTURE CONTENT.
    f) 210mm COMPACTED DEPTH 40mm RIPPED ROCK WITH A MINIMUM SOAKED CBR OF 10%, COMPACTED TO AT LEAST 98% STANDARD DRY DENSITY RATIO WITH A MEAN VALUE OF AT LEAST 100% STANDARD DRY DENSITY RATIO & WITHIN 1% OF THE STANDARD OPTIMUM MOISTURE CONTENT & A PERCENTAGE SWELL OF LESS THAN 1.5%

    TOTAL PAVEMENT DEPTH 570mm

    - EXTENDED CONCRETE DRIVEWAY (LOT 2019 & 2020) AS PER COUNCIL STD DRAWING SD11-6. PAVEMENT TO CONSIST OF:
    a) 200mm REINFORCED CHARCOAL COLOURED CONCRETE 32MPa WITH SL82 MESH
    b) 100mm COMPACTED DEPTH 20mm NOMINAL SIZE CLASS 3 F.C.R.

    TOTAL PAVEMENT DEPTH 300mm

30. ALL PAVEMENTS TO BE COMPACTED TO 98% AUSTRALIAN DRY DENSITY. PAVEMENT DEPTH MAY NOT BE MODIFIED UNLESS APPROVED BY COUNCIL TO THE SATISFACTION OF THE DIRECTOR ENGINEERING SERVICES OR HIS REPRESENTATIVE.

31. ALL 125mm THICK FOOTPATH CONCRETE PAVING TO BE REINFORCED WITH SL72 MESH AND MUST BE CONSTRUCTED WITH A 50mm UNDERLAYER OF 20mm COMPACTED CLASS 3 FCR IN ACCORDANCE WITH VPA STANDARD DRAWING EDCM 401.

32. CONCRETE BIN AREAS TO BE 125mm THICK CONCRETE PAVING TO BE REINFORCED WITH SL62 MESH AND MUST BE CONSTRUCTED WITH A 50mm UNDERLAYER OF 20mm COMPACTED CLASS 3 FCR IN ACCORDANCE WITH COUNCIL STANDARD DRAWING No SD2-1.

33. THE CONTRACTOR MUST COMPLETE A LEVEL CHECK BETWEEN ALL TBM'S TO VERIFY LEVEL VALUES BEFORE COMMENCEMENT OF WORKS. ALL TBM,s AND CONTROL POINTS ARE TO BE MAINTAINED AND PROTECTED AT ALL TIMES DURING CONSTRUCTION. SHOULD ANY MARKS BE DISTURBED, THE CONTRACTOR WILL IMMEDIATELY NOTIFY THE DEVELOPER'S CONSULTANT TO ARRANGE RE-INSTATEMENT AT THE CONTRACTORS EXPENSE.

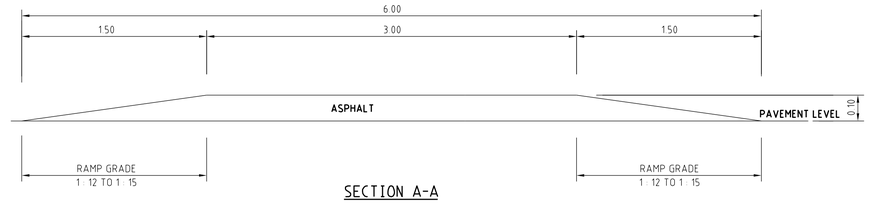

SECTION A-A

TYPICAL SECTION MARKED SHEET 3

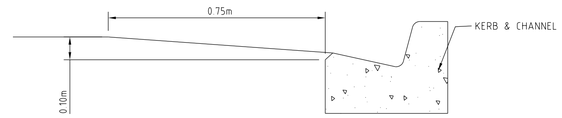

SECTION B-B

TYPICAL SECTION MARKED SHEET 3

SETOUT DETAILS FOR RAISED PAVEMENT

NOT TO SCALE

NOTE: ASPHALT TO BE COMPACTED IN LAYERS NOT MORE THAN 50mm.

34. ALL SIGNS AND TRAFFIC CONTROL MEASURES SHALL BE IN ACCORDANCE WITH AS 1742-1,2,3 -1986. LINE MARKING SHALL BE IN ACCORDANCE WITH VICROADS REQUIREMENT WITH LATERAL WORKS AND ARROWS BEING COLD APPLIED PLASTIC TROWELLED INTO PLACE (MATERIAL DEGADUR OR PLASTELINE) AND LONGITUDINAL LINES BEING EXTRUDED THERMOPLASTIC MATERIAL (VICROADS SPECIFICATION SEE SECTION 710 & 722).

35. PRIOR TO COMMENCEMENT OF WORKS, THE CONTRACTOR MUST SUBMIT A SMP TO THE DEVELOPER'S CONSULTANT FOR APPROVAL. THE CONTRACTOR MUST COMPLY WITH THE RECOMMENDATIONS OF THE ENVIRONMENT PROTECTION AUTHORITY PUBLICATION No.275 "CONSTRUCTION TECHNIQUES FOR SEDIMENT POLLUTION CONTROL" AND MW SITE ENVIRONMENTAL MANAGEMENT POLICY 3.8.2. APPROPRIATE SILTATION CONTROL IS TO BE MAINTAINED THROUGHOUT THE CONSTRUCTION AND MAINTENANCE PERIOD OF THE WORKS.

36. PRIOR TO START OF WORKS ON SITE, A PRE-COMMENCEMENT MEETING MUST BE HELD BETWEEN DIRECTOR ENGINEERING SERVICES OR HIS REPRESENTATIVE, THE DEVELOPER'S CONSULTANT AND THE CONTRACTOR.

37. PRIOR TO COMMENCING WORKS ON SITE, THE CONTRACTOR MUST OBTAIN ROAD OPENING/WORKS PERMITS FROM COUNCIL FOR ANY WORKS WITHIN EXISTING ROAD RESERVES OR WORKS ON ANY EXISTING INFRASTRUCTURE.

38. STREET NAMES TO BE INSTALLED ON PUBLIC LIGHTING POLES AT INTERSECTIONS WHERE POSSIBLE. ALL SIGNS ARE TO BE INSTALLED IN ACCORDANCE WITH COUNCIL STANDARD DRAWING SD11-1.

39. LOCATION OF ALL UNDERGROUND SERVICE CONDUITS TO BE MARKED ON BOTH SIDES OF THE KERB AND CHANNEL WITH W FOR WATER, RW FOR RECYCLED WATER, G FOR GAS, T FOR TELECOMMUNICATIONS & E FOR ELECTRICITY (REFER COUNCIL STANDARD DRG SD11-8).

40. THE CONTRACTOR IS TO INSTALL BLUE RRPM'S ON THE ROAD CENTRLINE AND MARKER POSTS TO INDICATE THE LOCATION OF FIRE PLUGS OR HYDRANTS IN ACCORDANCE WITH WYNDHAM CITY COUNCIL'S STANDARD DRAWING SD11-11.

41. GAS AND WATER CONDUITS TO BE 50mm & 100mm DIAMETER RESPECTIVELY.

42. ALL SERVICE TRENCHES UNDER CONCRETE FOOTPATHS AND VEHICLE CROSSINGS TO BE BACKFILLED WITH CLASS 3 CRUSHED ROCK MATERIAL.

43. EXISTING DAM OR WATERCOURSES TO BE EXCAVATED TO A FIRM BASE AND BACKFILLED TO LEVEL 1 AS SPECIFIED. DEVELOPER'S CONSULTANT TO BE NOTIFIED WHEN THE DAM OR WATERCOURSES ARE EXCAVATED TO A FIRM BASE. NO FILLING IS TO BE PLACED PRIOR TO DAMS BEING INSPECTED AND LEVELS TAKEN. BACKFILLING IS TO BE CARRIED OUT TO THE SATISFACTION OF THE DIRECTOR ENGINEERING SERVICES OR HIS REPRESENTATIVE.

44. PROVIDE 1.8m HIGH PALING FENCE ALONG ANY COMMON BOUNDARY BETWEEN A LOT AND MUNICIPAL RESERVE. PALINGS TO BE ON THE RESERVE SIDE AND CONSTRUCTED IN ACCORDANCE WITH COUNCIL STANDARD DRAWING SD11-5B.

45. FITZROY BOXES TO BE PROVIDED FOR WATER AND GAS TAPPINGS LOCATED UNDER THE BICYCLE PATH FOR LOTS 2004-2006.

46. PROVIDE TEMPORARY SAFETY BARRIER FENCE (FARM FENCE AS PER MW STD. DWG. 7251/4/203) ALONG EDGE OF OUTFALL DRAINS. SAFETY FENCE TO REMAIN UNTIL PERMANENT UNDERGROUND DRAINAGE IS INSTALLED.

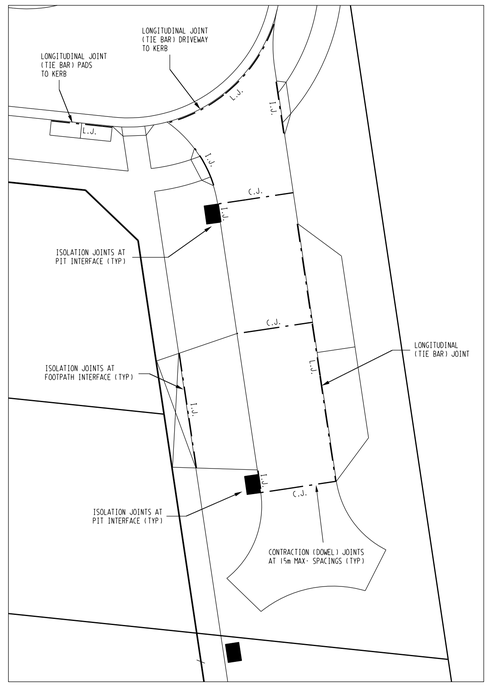

PAVEMENT JOINTING

SCALE 1 : 200 @ A1

4 2 0 4 8 16

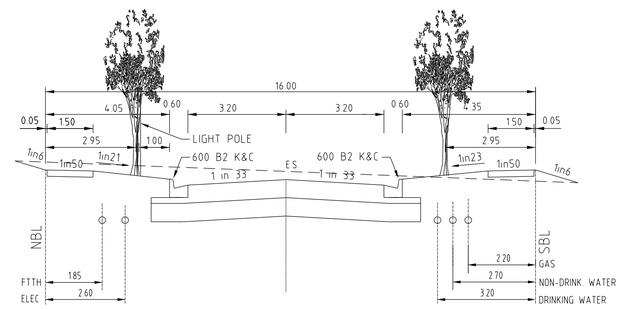

HOUDINI DRIVE & GELLER CIRCUIT

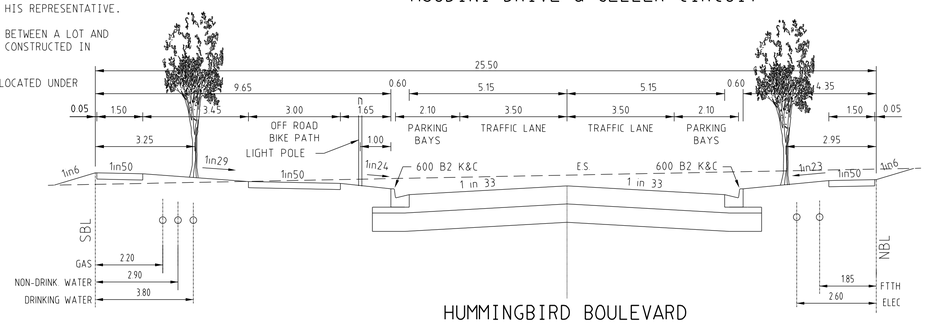

HUMMINGBIRD BOULEVARD

TYPICAL CROSS SECTIONS

AS CONSTRUCTED

AMENDMENTS		
C	22/05/19	REVISED PAVEMENTS FOR GELLER, HOUDINI, GRANADA & FIRMONA
B	9/05/19	NOTE 46 ADDED
A	23/01/19	ISSUED FOR CONSTRUCTION
VER.	DATE	REMARKS

breese pitt dixon pty. ltd.
land surveyors civil engineers
1/19 cato street
hawthorn east, 3123
telephone 8823 2300
fax no. 8823 2310

MELWAY REF.	234-F-2
SURVEY	BPD
DESIGN	NC
DRAWN	NC
CHECKED	

RIVERDALE VILLAGE
STAGE 20

MUNICIPALITY: WYNDHAM
REFERENCE: 8554 E/20

SCALE AS SHOWN | DATUM AHD | DATE JUN'18 | SHEET 2 OF 21 | C

I:\H8554\ENG\STG20\E20_R02_NOTE.dgn
Plotted:22/05/2019

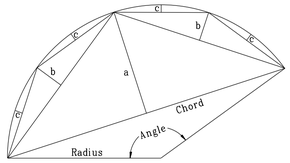

CURVE SETOUT DIAGRAM

Alignment B

	Point no	Easting	Northing	RL
B	1	327·545	423·883	44·527
B	2	336·097	413·301	44·714
B	3	331·397	422·623	44·545
B	4	334·019	420·369	44·561
B	5	335·673	417·332	44·576

	Curve no	Radius	Chord	Mid Ord	Qtr Ord	Mid Ord RL
B	1 2	9·600	13·605	2·826	2·204	44·561

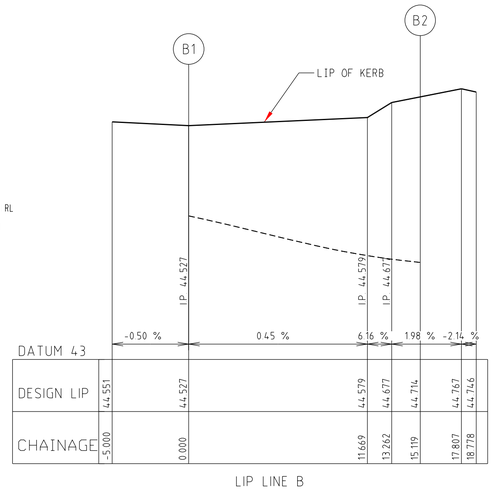

DATUM 43

DESIGN LIP	44.551	44.527	44.579	44.677	44.714	44.767	44.746
CHAINAGE	-5.000	0.000	11.669	13.262	15.119	17.807	18.778

LIP LINE B

ALL SETOUT DETAILS ARE PROVIDED AT LIP OF KERB

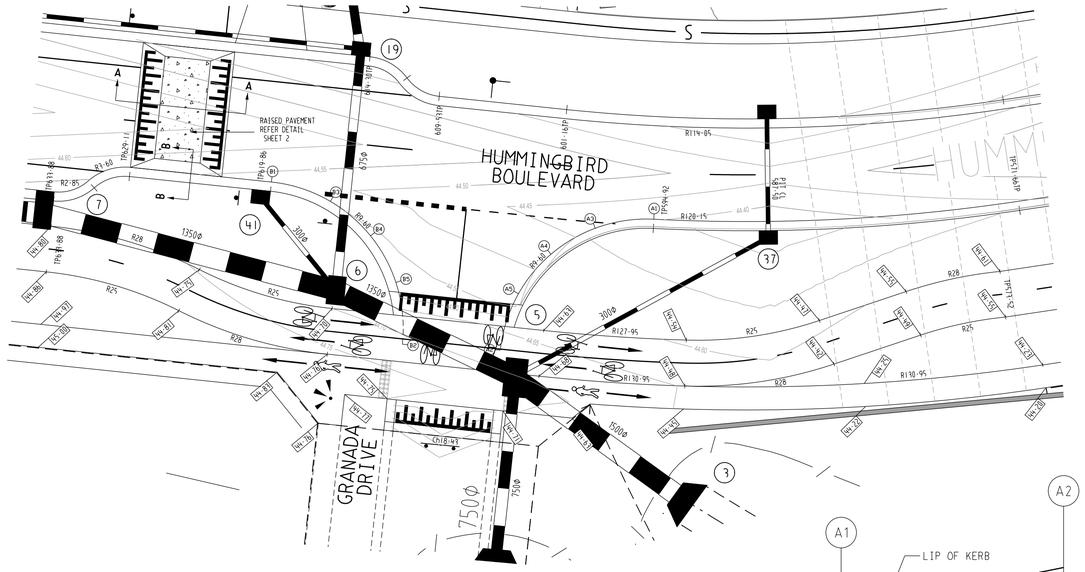

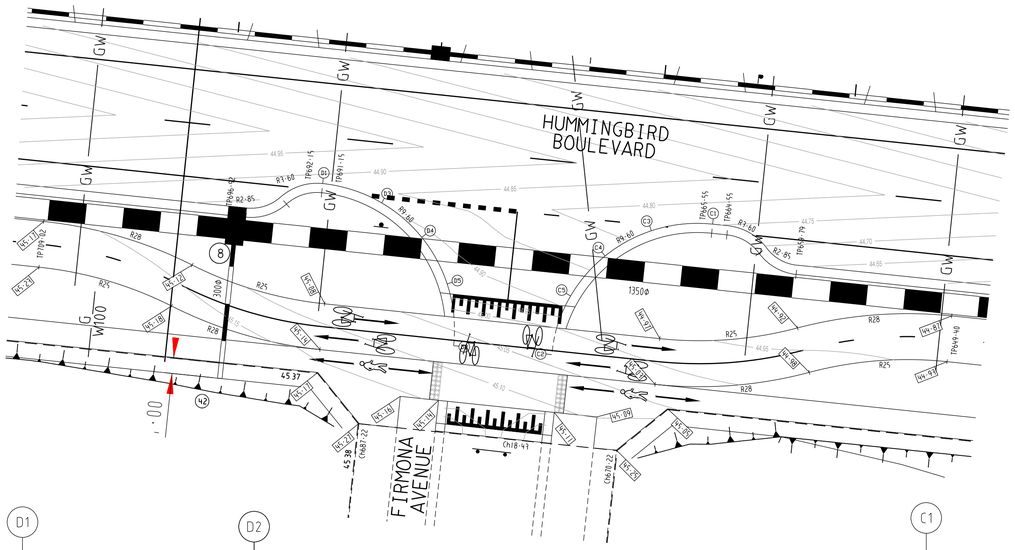

INTERSECTION DETAILS

SCALE 1:200

Alignment A

	Point no	Easting	Northing	RL
A	1	352·518	421·458	44·403
A	2	342·491	412·904	44·675
A	3	348·690	420·869	44·494
A	4	345·805	419·174	44·478
A	5	343·677	416·591	44·510

	Curve no	Radius	Chord	Mid Ord	Qtr Ord	Mid Ord RL
A	1 2	-9·600	13·180	2·619	2·036	44·478

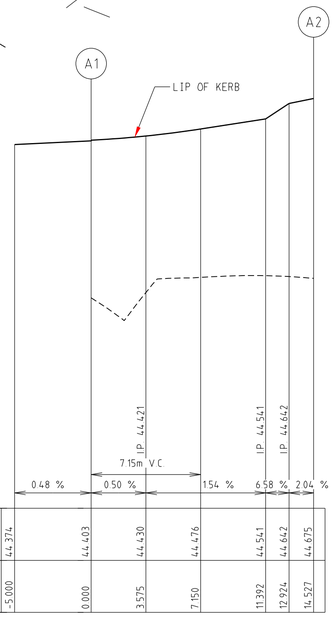

DATUM 42

DESIGN LIP	44.374	44.403	44.430	44.476	44.541	44.642	44.675
CHAINAGE	-5.000	0.000	3.575	7.150	11.392	12.924	14.527

LIP LINE A

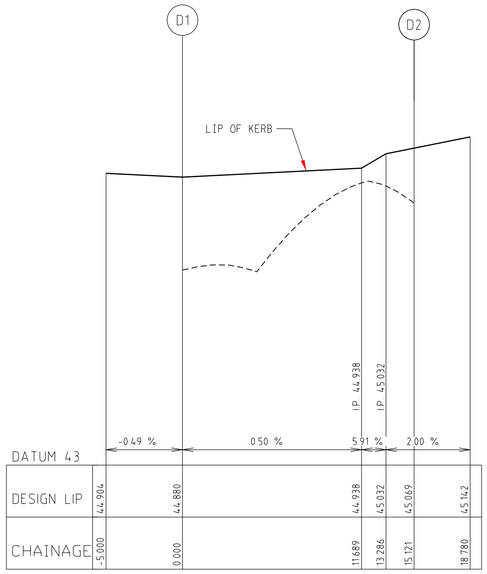

Alignment D

	Point no	Easting	Northing	RL
D	1	256·627	431·257	44·880
D	2	265·178	420·675	45·069
D	3	260·479	429·997	44·900
D	4	263·101	427·743	44·917
D	5	264·755	424·706	44·935

	Curve no	Radius	Chord	Mid Ord	Qtr Ord	Mid Ord RL
D	1 2	9·600	13·605	2·826	2·204	44·917

DATUM 43

DESIGN LIP	44.904	44.880	44.938	45.032	45.069	45.142
CHAINAGE	-5.000	0.000	11.689	13.286	15.121	18.780

LIP LINE D

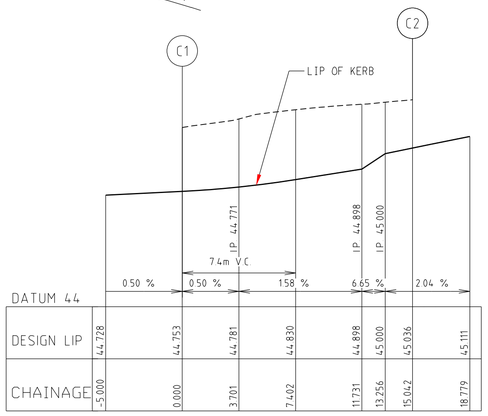

DATUM 44

DESIGN LIP	44.728	44.753	44.781	44.830	44.898	45.000	45.036	45.111
CHAINAGE	-5.000	0.000	3.701	7.402	11.731	13.256	15.042	18.779

LIP LINE C

Alignment C

	Point no	Easting	Northing	RL
C	1	282·090	428·610	44·753
C	2	271·553	420·096	45·036
C	3	278·085	428·177	44·785
C	4	275·063	426·528	44·832
C	5	272·817	423·920	44·886

	Curve no	Radius	Chord	Mid Ord	Qtr Ord	Mid Ord RL
C	1 2	-9·599	13·546	2·797	2·180	44·832

AS CONSTRUCTED

1:200 @ A1 4 2 00 4 8 16

SYMBOL LEGEND

	Prop	Exist
Drains		
Sewer <300	S	S
Sewer >300	S	S
Water	W	W
House Drain	H	H
Property Inlet		
Street Sign		
PSM		
Retaining Wall		
Conduits 50mm	GW	GW
Conduits 100mm	W100	W100
Ex Gas/Elect/Tel	G E T	

Ex/Natural/FS Level +28·57 +N28·57 28·57
FS @ Building Line BL28·57
Top/Toe of Batter TOP28·57 TOE28·57
Top Ret. Wall Level TW28·57
100yr Flood Level FL28·57
Fill Prop/Ex (> 0.2m depth)
Cut Prop/Ex (> 0.2m depth)

AMENDMENTS

VER.	DATE	REMARKS
E	25/05/20	BUS STOP PAD REMOVED AS PER TFV INSTRUCTION
D	20/05/20	PIPE DIA 3-5 CHANGED, BUS STOP PAD DETAIL ADDED
C	7/04/20	REVISED PATH LEVELS EAST OF GRANADA DRIVE
B	24/10/19	DRAIN LINE 8-42 ADDED
A	23/01/19	ISSUED FOR CONSTRUCTION

breese pitt dixon pty. ltd.
land surveyors civil engineers
1/19 cato street
hawthorn east, 3123
telephone 8823 2300
fax no. 8823 2310

MELWAY REF. 234-F-2
SURVEY BPD
DESIGN NC
DRAWN NC
CHECKED

RIVERDALE VILLAGE STAGE 20

MUNICIPALITY: WYNDHAM
REFERENCE: 8554 E/20

SCALE AS SHOWN | DATUM AHD | DATE JUN'18 | SHEET 3 OF 21 | E

I:\A8554\ENG\STAGE\E20\R03_INTI.dgn
Plotted:25/05/2020

INTERSECTION DETAILS

SCALE 1:200

1:200 4 2 00 4 8 16

Alignment H

Point no	Easting	Northing	RL
H 1	185·136	533·298	46·099
H 2	193·692	522·757	45·743
H 3	185·573	529·281	46·023
H 4	187·231	526·255	45·910
H 5	189·851	524·011	45·801

Curve no	Radius	Chord	Mid Ord	Qtr Ord	Mid Ord RL
H 1 2	-9·600	13·576	2·812	2·192	45·910

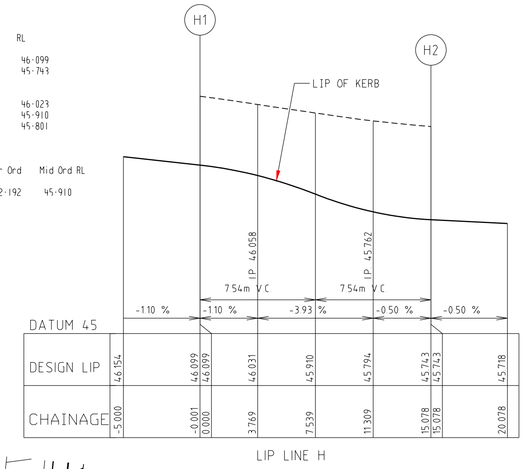

DATUM 45							
DESIGN LIP	46.154	46.099	46.099	46.031	45.910	45.794	45.743	45.743	45.718
CHAINAGE	-5.000	-0.001	0.000	3.769	7.539	11.309	15.078	15.078	20.078

LIP LINE H

North

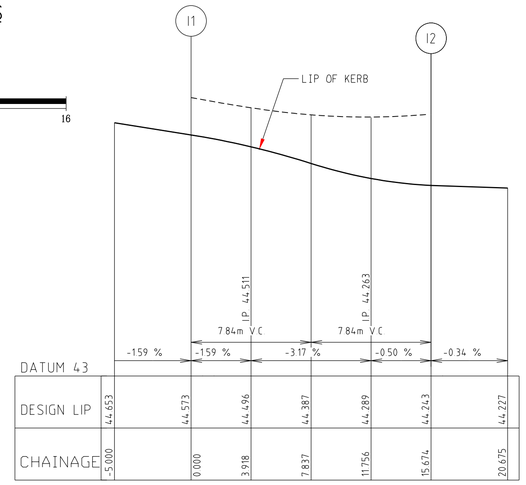

DATUM 43							
DESIGN LIP	44.653	44.573	44.496	44.387	44.289	44.243	44.227
CHAINAGE	-5.000	0.000	3.918	7.837	11.756	15.674	20.675

LIP LINE I

Alignment I

Point no	Easting	Northing	RL
I 1	313·625	510·286	44·573
I 2	323·020	520·111	44·243
I 3	317·876	510·924	44·485
I 4	320·731	512·896	44·387
I 5	322·573	515·836	44·297

Curve no	Radius	Chord	Mid Ord	Qtr Ord	Mid Ord RL
I 1 2	-8·599	13·592	3·331	2·631	44·387

Alignment J

Point no	Easting	Northing	RL
J 1	312·963	503·921	44·573
J 2	320·149	503·174	44·459
J 3	330·417	513·913	44·280
J 4	329·350	521·057	44·243
J 5	324·794	503·871	44·409
J 6	327·915	506·027	44·369
J 7	329·929	509·240	44·329

Curve no	Radius	Chord	Mid Ord	Qtr Ord	Mid Ord RL
J 2 3	-9·400	14·859	3·641	2·876	44·369

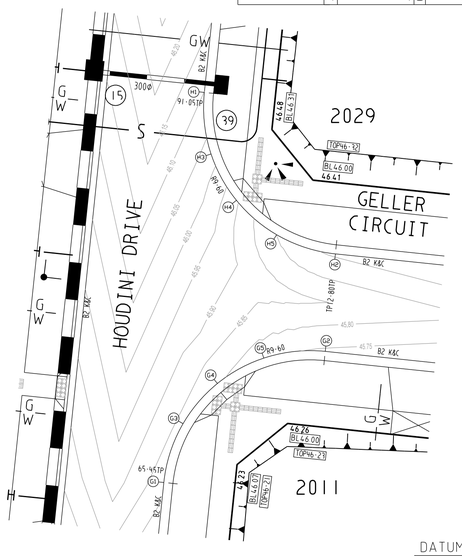

Alignment G

Point no	Easting	Northing	RL
G 1	182·488	507·835	45·818
G 2	193·030	516·391	45·743
G 4	183·743	511·676	45·836
G 5	185·987	514·296	45·810
G 6	189·013	515·994	45·772

Curve no	Radius	Chord	Mid Ord	Qtr Ord	Mid Ord RL
G 1 2	9·600	13·576	2·812	2·192	45·810

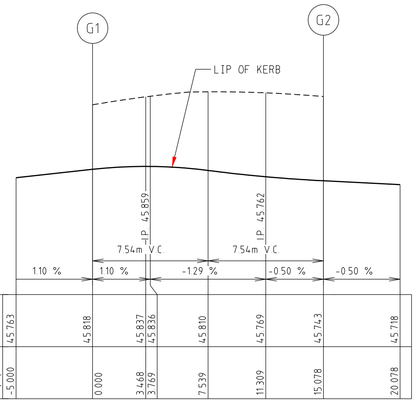

DATUM 45							
DESIGN LIP	45.763	45.818	45.837	45.836	45.810	45.769	45.743	45.718
CHAINAGE	-5.000	0.000	3.468	3.769	7.539	11.309	15.078	20.078

LIP LINE G

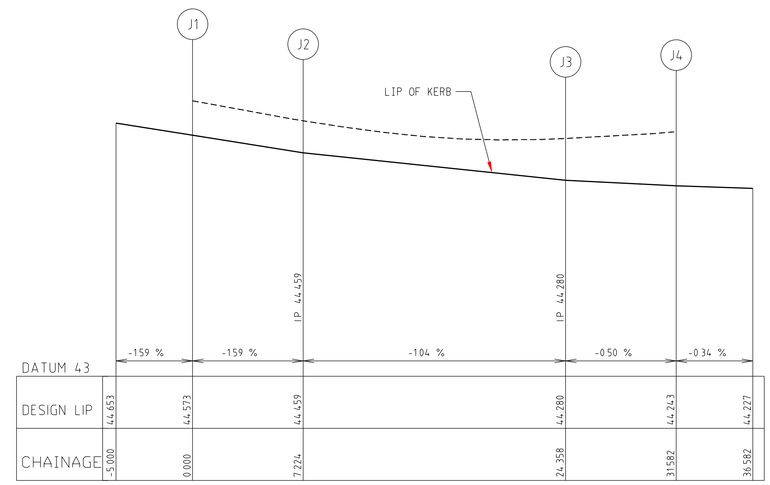

DATUM 43						
DESIGN LIP	44.653	44.573	44.459	44.280	44.243	44.227
CHAINAGE	-5.000	0.000	7.224	24.358	31.582	36.582

LIP LINE J

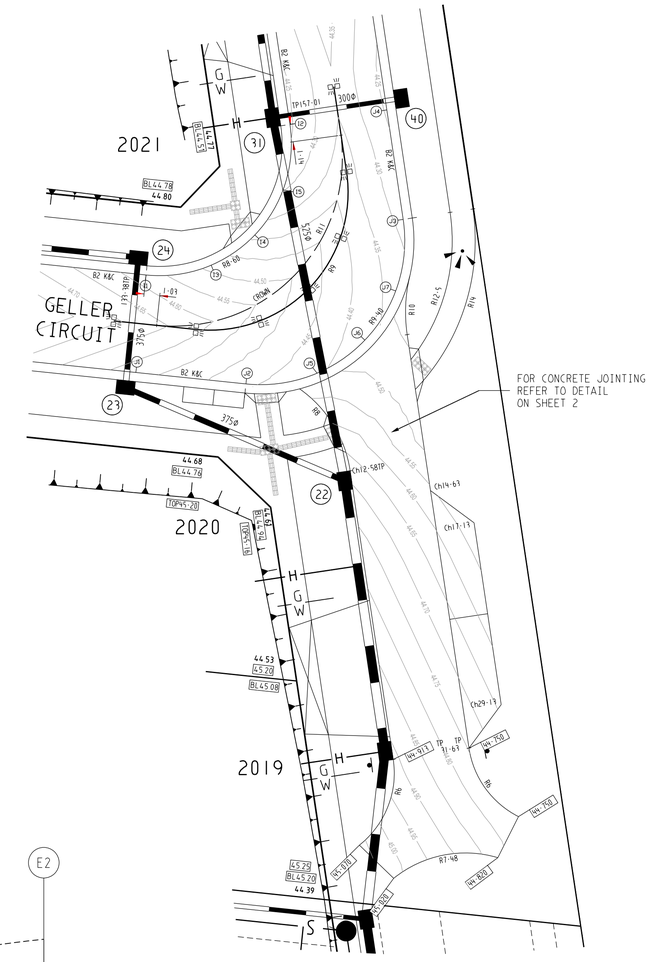

Alignment F

Point no	Easting	Northing	RL
F 1	160·121	447·424	45·363
F 2	170·662	455·979	45·084
F 3	164·138	447·861	45·313
F 4	167·164	449·519	45·224
F 5	169·408	452·139	45·134

Curve no	Radius	Chord	Mid Ord	Qtr Ord	Mid Ord RL
F 1 2	-9·599	13·575	2·811	2·192	45·224

ALL SETOUT DETAILS ARE PROVIDED AT LIP OF KERB

Alignment E

Point no	Easting	Northing	RL
E 1	185·584	444·777	45·236
E 2	177·028	455·318	45·084
E 3	181·743	446·031	45·229
E 4	179·123	448·276	45·179
E 5	177·465	451·302	45·121

Curve no	Radius	Chord	Mid Ord	Qtr Ord	Mid Ord RL
E 1 2	9·600	13·576	2·812	2·192	45·179

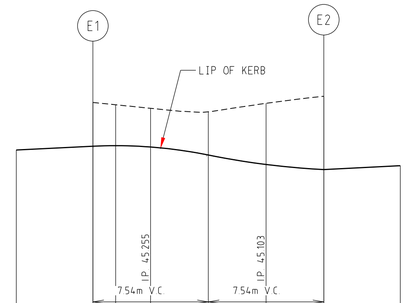

DATUM 44							
DESIGN LIP	45.212	45.236	45.240	45.231	45.179	45.117	45.084	45.109
CHAINAGE	-5.000	0.000	1.686	3.769	7.539	11.309	15.078	20.078

LIP LINE E

AS CONSTRUCTED

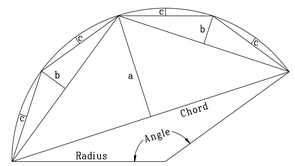

CURVE SETOUT DIAGRAM

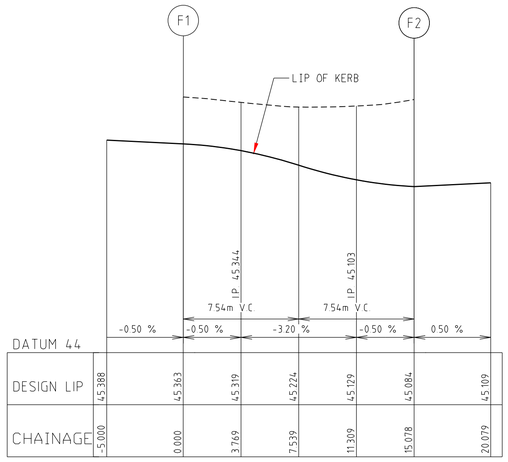

DATUM 44							
DESIGN LIP	45.388	45.363	45.319	45.224	45.129	45.084	45.109
CHAINAGE	-5.000	0.000	3.769	7.539	11.309	15.078	20.079

LIP LINE F

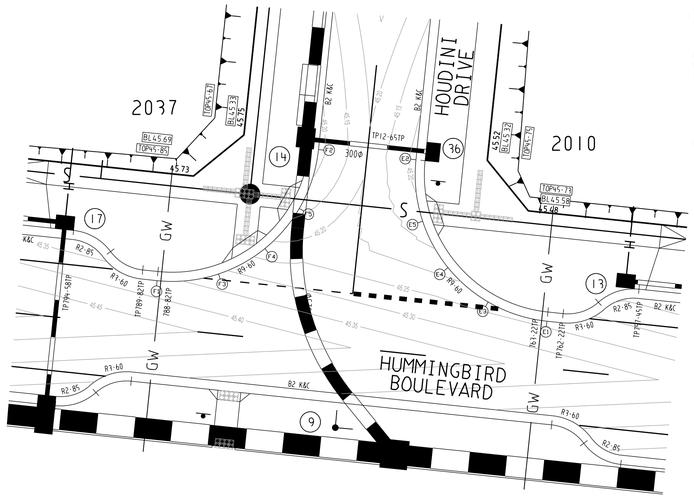

AMENDMENTS

VER.	DATE	REMARKS
A	23/01/19	ISSUED FOR CONSTRUCTION

breese pitt dixon pty. ltd.
land surveyors civil engineers
1/19 cato street
hawthorn east, 3123
telephone 8823 2300
fax no. 8823 2310

MELWAY REF.	234-F-2
SURVEY	BPD
DESIGN	NC
DRAWN	NC
CHECKED	

RIVERDALE VILLAGE
STAGE 20

MUNICIPALITY: WYNDHAM

REFERENCE: 8554 E/20

SCALE AS SHOWN | DATUM AHD | DATE JUN'18 | SHEET 4 OF 21 | A

I:\H8554\ENGS\S720\E20_R04_INT2.dgn

Plotted:22/01/2019

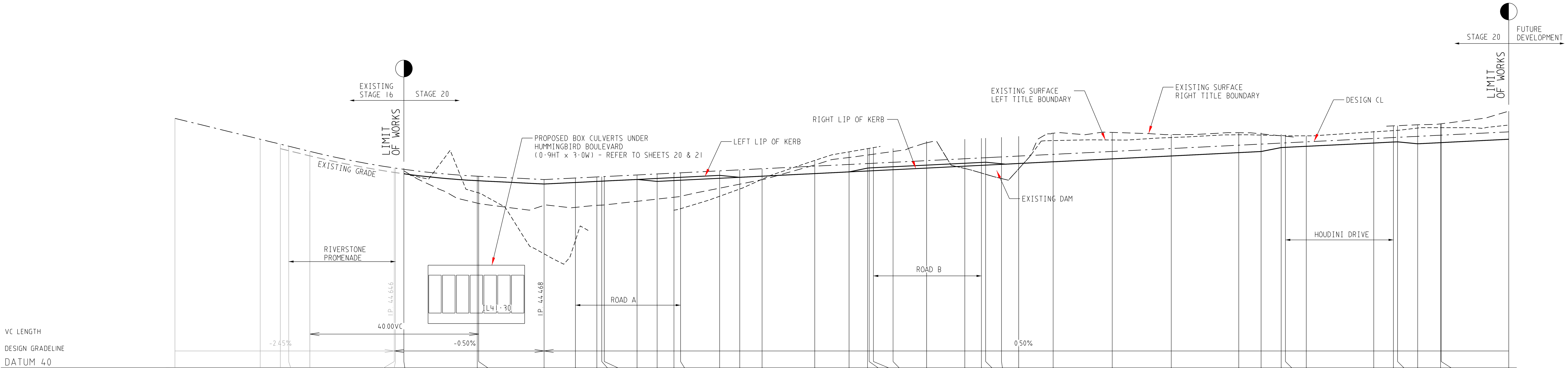

CHAINAGE CENTRE LINE	ES LEFT TITLE BDY	FS LEFT TITLE BDY	LEFT LIP OF KERB	DESIGN CL	RIGHT LIP OF KERB	FS RIGHT TITLE BDY	ES RIGHT TITLE BDY	
500.00				45.92				
520.20	45.45	45.47	45.27	45.42	45.27	45.60	45.75	TP
524.97	45.36	45.35	45.21	45.31	45.21	45.48	45.65	TP
526.97	45.32	45.30	45.16	45.26	45.16			TP
531.98	45.21	45.18	45.04	45.14	45.04			
551.98	44.68	44.78	44.65	44.74	44.65		44.81	
552.27	44.67	44.78	44.64	44.74	44.64	44.58	44.80	TP
554.27	44.61	44.48	44.61	44.71	44.61	44.55	44.68	
571.66	44.16	44.19	44.45	44.55	44.45	44.38	43.91	TP
571.98	44.15	44.19	44.44	44.55	44.44	44.38	43.90	
587.50	42.70	44.27	44.37	44.47	44.37	44.30	43.86	
594.92	43.02	44.52	44.40	44.50	44.40	44.34	43.81	LTP
600.00			44.43	44.53	44.43	44.37	43.86	
601.16			44.43	44.54	44.43	44.37	43.86	RTP
601.76			44.44	44.54	44.44	44.37	43.87	
609.53			44.48	44.58	44.48		43.95	RTP
614.30			44.50	44.60	44.43		44.00	RTP
618.29	43.74	44.83	44.52	44.62	44.45	44.87	44.05	
619.86	43.78	44.85	44.53	44.63	44.46	44.88	44.07	LTP
629.11	44.07	44.95	44.57	44.67	44.50	44.92	44.26	LTP
633.88	44.24	45.00	44.53	44.70	44.53	44.95	44.36	LTP
639.17	44.48	45.03	44.55	44.72	44.55	44.97	44.46	
651.67	44.92	45.08	44.61	44.79	44.61	45.04	44.81	
659.79	45.12	45.06	44.65	44.83	44.65	45.08	44.99	LTP
664.17	45.20	45.05	44.75	44.85	44.68	45.10	45.05	
664.55	45.21	45.05	44.75	44.85	44.68	45.10	45.05	LTP
665.55	45.23	45.05	44.75	44.85	44.68	45.10	45.07	LTP
670.22			44.78	44.88	44.71	45.13	45.13	
678.17			44.82	44.92	44.75	45.17	45.38	
687.22			44.86	44.96	44.79	45.21	45.43	
691.15	45.38	45.17	44.88	44.98	44.81	45.23	45.45	LTP
692.17	45.38	45.17	44.88	44.99	44.81	45.24	45.45	
695.92	45.38	45.21	44.83	45.00	44.83	45.25	45.47	LTP
700.00	45.38	45.27	44.85	45.02	44.85	45.27	45.49	
708.17	45.39	45.37	44.89	45.07	44.89	45.31	45.57	
722.17	45.41	45.44	44.96	45.13	44.96	45.38	45.59	
736.17	45.46	45.51	45.03	45.20	45.03	45.45	45.53	
752.17	45.53	45.59	45.11	45.28	45.11	45.53	45.58	
757.45	45.52		45.14	45.31	45.14		45.55	TP
762.22	45.51	45.67	45.23	45.33	45.23		45.51	TP
763.22	45.51	45.68	45.24	45.34	45.24		45.50	RTP
768.17	45.51	45.70	45.26	45.36	45.26			
784.17	45.60	45.78	45.34	45.44	45.34			
788.82	45.63	45.80	45.36	45.46	45.36		45.74	RTP
789.82	45.64	45.80	45.36	45.47	45.37		45.75	TP
794.58	45.69	45.80	45.32	45.49	45.32	45.74	45.77	TP
800.00	45.70	45.83	45.35	45.52	45.35	45.77	45.79	
800.17	45.70	45.83	45.35	45.52	45.35	45.77	45.79	
816.17	45.76	45.91	45.43	45.60	45.43	45.85	46.09	

NOTE: LEFT IS THE TRUE LEFT IN DIRECTION OF INCREASING CHAINAGE

HUMMINGBIRD BOULEVARD

LONGITUDINAL SECTION

SCALE HORIZONTAL 1:500
VERTICAL 1:50

AS CONSTRUCTED

A1 SHEET
1:500 10 5 00 10 20 40
1:50 1 0.5 00 1 2 4

VER.	DATE	REMARKS
B	7/04/20	FS LEFT TITLE BDY RLS ALTERED FROM CH554.27 TO CH594.92
A	23/01/19	ISSUED FOR CONSTRUCTION

AMENDMENTS

breese pitt dixon pty. ltd.
land surveyors civil engineers
1/19 cato street hawthorn east, 3123
telephone 8823 2300
fax no. 8823 2310

MELWAY REF.	234-F-2
SURVEY	BPD
DESIGN	NC
DRAWN	NC
CHECKED	

RIVERDALE VILLAGE
STAGE 20

MUNICIPALITY: WYNDHAM
REFERENCE: 8554 E/20

SCALE AS SHOWN | DATUM AHD | DATE JUN'18 | SHEET 5 OF 21 | B

Plotted:7/04/2020
I:\8554\ENG\ST20\E20_R05_HULS.dgn

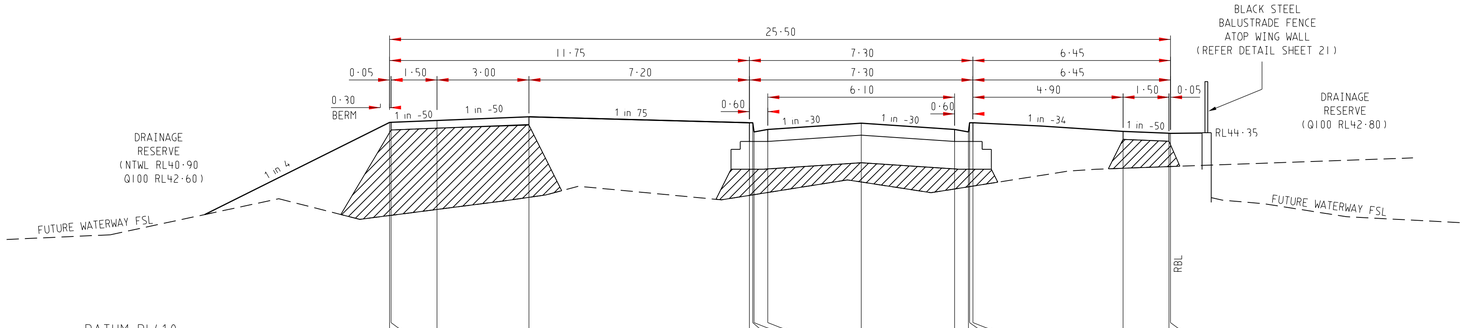

DATUM RL41.0

DESIGN SURFACE	44.52	44.52	44.55	44.61	44.51	44.51	44.36	44.40	44.50	44.40	44.36	44.51	44.51	44.37	44.34	44.34
EXISTING SURFACE	43.00	43.00	43.10	43.29	43.33	43.33	43.34	43.37	43.55	43.43	43.47	43.47	43.48	43.77	43.80	43.80
OFFSET	-15.40	-15.35	-13.85	-10.85	-3.65	-3.54	-3.50	-3.05	0.00	3.05	3.50	3.54	3.65	8.55	10.05	10.10

594.92

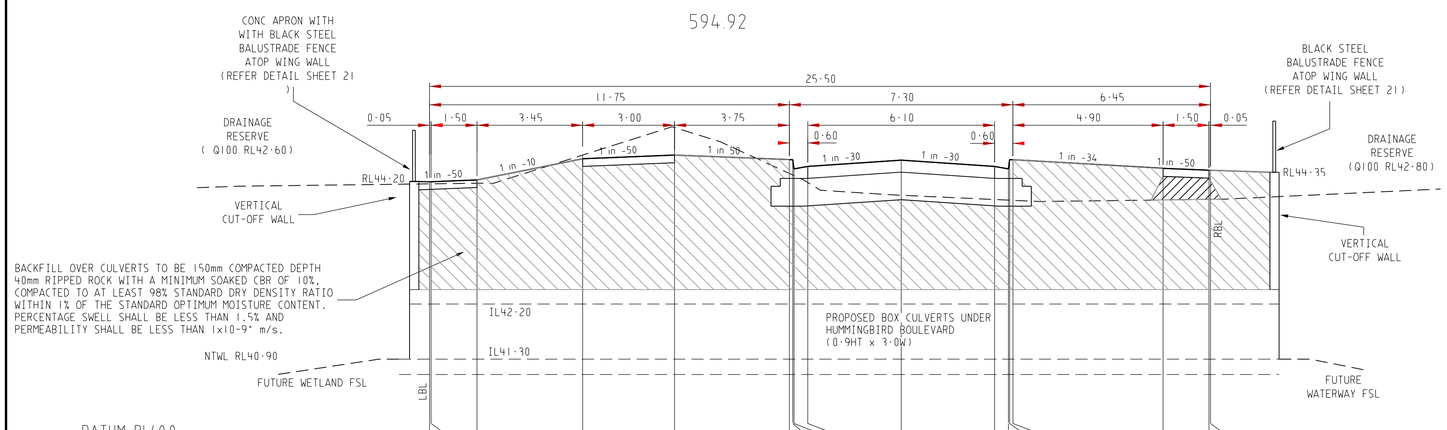

DATUM RL40.0

DESIGN SURFACE	44.20	44.20	44.23	44.57	44.63	44.56	44.56	44.41	44.45	44.55	44.45	44.41	44.56	44.56	44.41	44.38	44.38
EXISTING SURFACE	44.16	44.16	44.17	44.63	45.08	44.33	44.31	44.30	44.18	43.97	43.91	43.90	43.89	43.89	43.90	43.91	43.91
OFFSET	-15.40	-15.35	-13.85	-10.40	-7.40	-3.65	-3.54	-3.50	-3.05	0.00	3.05	3.50	3.54	3.65	8.55	10.05	10.10

571.66

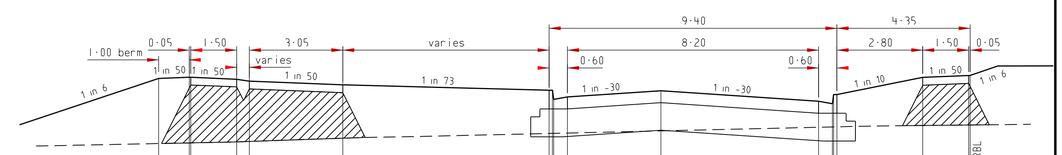

DATUM RL42.0

DESIGN SURFACE	44.83	44.85	44.85	44.82	44.78	44.72	44.64	44.64	44.49	44.53	44.63	44.46	44.42	44.57	44.57	44.85	44.88	44.88
EXISTING SURFACE	43.77	43.78	43.78	43.79	43.80	43.85	43.93	43.93	43.93	43.94	43.97	44.03	44.04	44.04	44.04	44.06	44.07	44.07
OFFSET	-16.40	-15.40	-15.35	-13.85	-13.44	-10.39	-3.65	-3.54	-3.50	-3.05	0.00	5.15	5.60	5.64	5.75	8.55	10.05	10.10

619.86

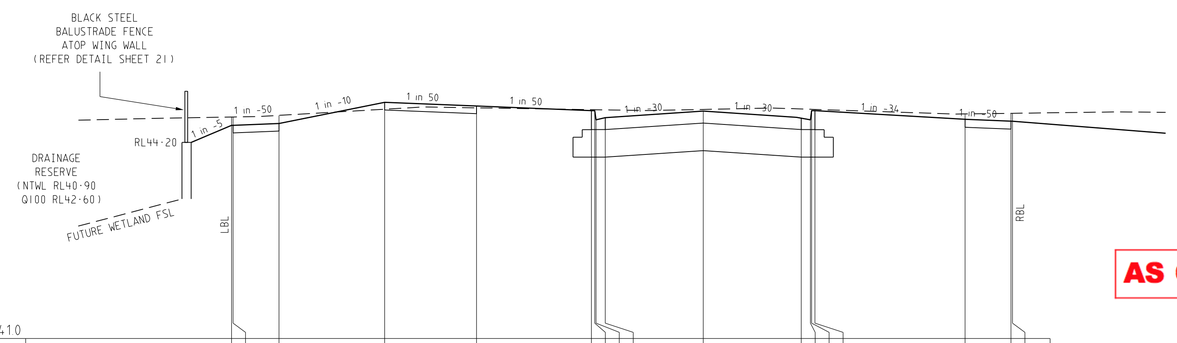

DATUM RL41.0

DESIGN SURFACE	44.48	44.48	44.51	44.85	44.79	44.71	44.71	44.56	44.60	44.71	44.60	44.56	44.71	44.71	44.57	44.54	44.54
EXISTING SURFACE	44.61	44.62	44.64	44.74	44.76	44.73	44.73	44.73	44.73	44.74	44.75	44.74	44.74	44.74	44.67	44.67	44.68
OFFSET	-15.40	-15.35	-13.85	-10.40	-7.40	-3.65	-3.54	-3.50	-3.20	0.00	3.20	3.50	3.54	3.65	8.55	10.05	10.10

554.27

AS CONSTRUCTED

HUMMINGBIRD BOULEVARD

CROSS SECTIONS No.1

SCALE HORIZONTAL 1:100
VERTICAL 1:50

1:100 2 1 00 2 4 8
1:50 1 0.5 00 1 2 4

INDICATES CLASS 3 CRUSHED ROCK BACKFILL

NOTE: PAVEMENT CROWN LEVELS ARE
BONING POINT LEVELS.

VER.	DATE	REMARKS
D	20/05/20	CH594.92 REVISED FOR BUS STOP PAD REMOVAL
C	13/05/20	CH594.92 REVISED FOR BUS STOP PAD INSERTION
B	7/04/20	REVISED WALL DETAIL & LEFT PATH LEVELS FOR CH554.27 TO CH594.92
A	23/01/19	ISSUED FOR CONSTRUCTION

AMENDMENTS

breese pitt dixon pty. ltd.
land surveyors civil engineers
1/19 cato street
hawthorn east, 3123
telephone 8823 2300
fax no. 8823 2310

MELWAY REF. 234-F-2
SURVEY BPD
DESIGN NC
DRAWN NC
CHECKED

RIVERDALE VILLAGE
STAGE 20

MUNICIPALITY WYNDHAM
REFERENCE 8554 E/20

SCALE AS SHOWN | DATUM AHD | DATE JUN'18 | SHEET 6 OF 21 | D

Plotted:20/05/2020
I:\H8554\ENG\ST20\E20_R06_HUXS1.dgn

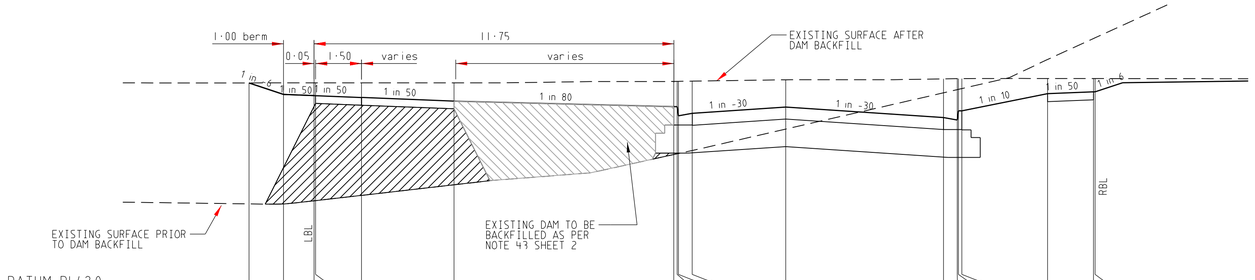

DATUM RL42·0

DESIGN SURFACE	45·38	45·19	45·17	45·17	45·14	45·08	44·99	44·99	44·84	44·88	44·98	44·81	44·77	44·92	44·92	45·20	45·23	45·23
EXISTING SURFACE	45·38	45·38	45·38	45·38	45·38	45·38	45·40	45·40	45·40	45·40	45·43	45·44	45·45	45·45	45·45	45·45	45·45	45·45
OFFSET	-17·52	-16·40	-15·40	-15·35	-13·85	-10·83	-3·65	-3·54	-3·50	-3·05	0·00	5·15	5·60	5·64	5·75	8·55	10·05	10·10

691·15

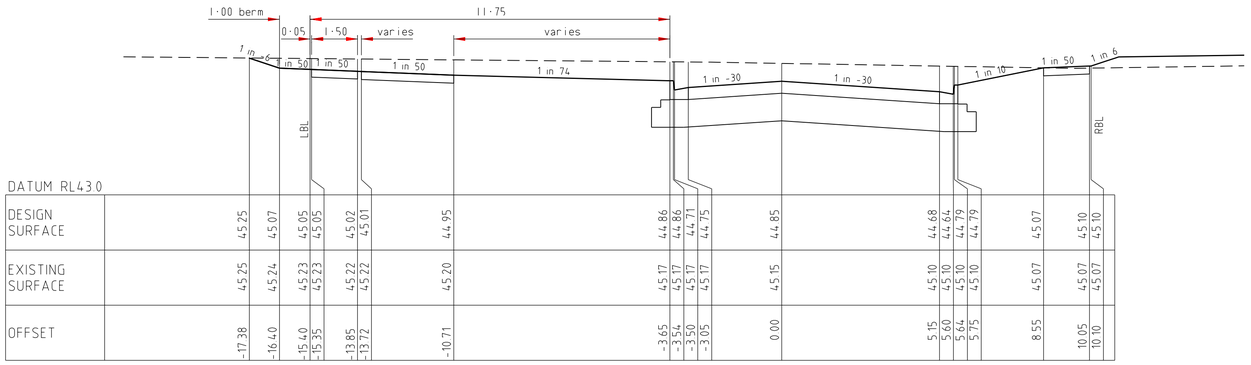

DATUM RL43·0

DESIGN SURFACE	45·25	45·07	45·05	45·05	45·02	45·01	44·95	44·86	44·86	44·71	44·75	44·85	44·68	44·64	44·79	44·79	45·07	45·10	45·10
EXISTING SURFACE	45·25	45·24	45·23	45·23	45·22	45·22	45·20	45·17	45·17	45·17	45·17	45·15	45·10	45·10	45·10	45·10	45·07	45·07	45·07
OFFSET	-17·38	-16·40	-15·40	-15·35	-13·85	-13·72	-10·71	-3·65	-3·54	-3·50	-3·05	0·00	5·15	5·60	5·64	5·75	8·55	10·05	10·10

665·55

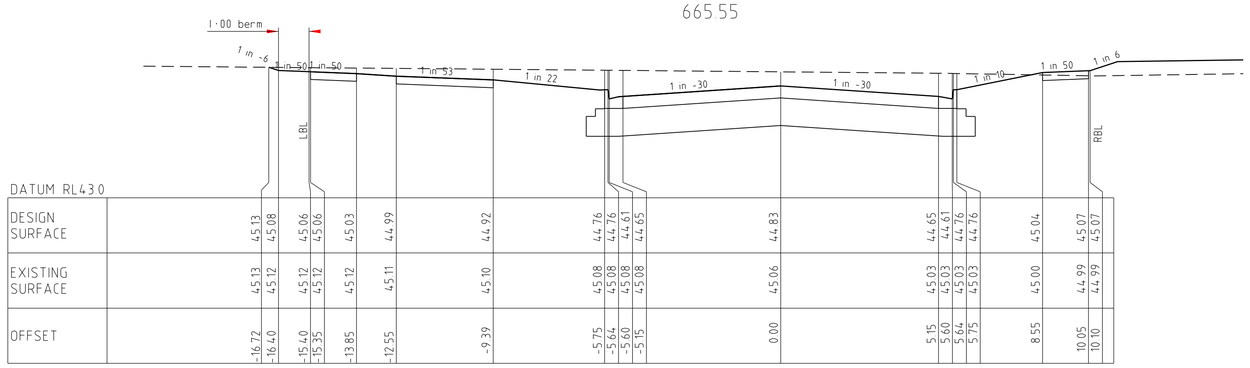

DATUM RL43·0

DESIGN SURFACE	45·13	45·08	45·06	45·06	45·03	44·99	44·92	44·76	44·76	44·61	44·65	44·83	44·65	44·61	44·76	44·76	45·04	45·07	45·07
EXISTING SURFACE	45·13	45·12	45·12	45·12	45·12	45·11	45·10	45·08	45·08	45·08	45·08	45·06	45·03	45·03	45·03	45·03	45·00	44·99	44·99
OFFSET	-16·72	-16·40	-15·40	-15·35	-13·85	-12·55	-9·39	-5·75	-5·64	-5·60	-5·15	0·00	5·15	5·60	5·64	5·75	8·55	10·05	10·10

659·79

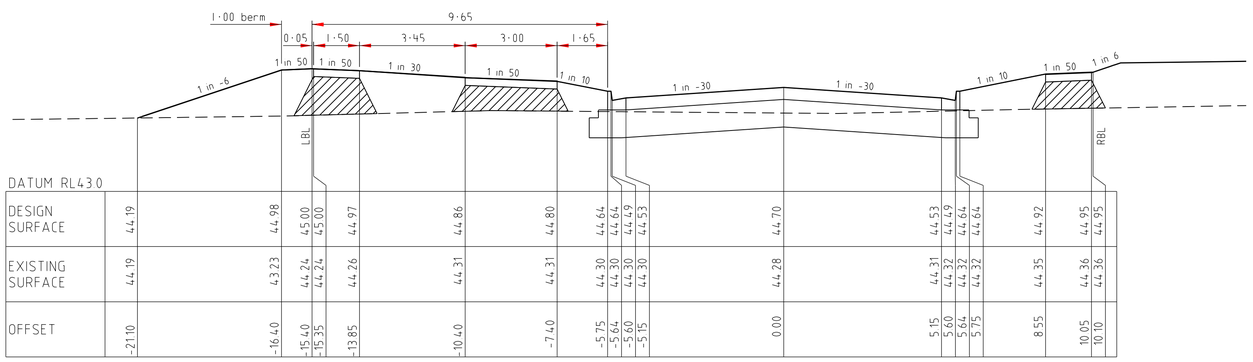

DATUM RL43·0

DESIGN SURFACE	44·19	44·98	45·00	45·00	44·97	44·86	44·80	44·64	44·64	44·49	44·53	44·70	44·53	44·49	44·64	44·64	44·92	44·95	44·95
EXISTING SURFACE	44·19	43·23	44·24	44·24	44·26	44·31	44·31	44·30	44·30	44·30	44·30	44·28	44·31	44·32	44·32	44·32	44·35	44·36	44·36
OFFSET	-21·10	-16·40	-15·40	-15·35	-13·85	-10·40	-7·40	-5·75	-5·64	-5·60	-5·15	0·00	5·15	5·60	5·64	5·75	8·55	10·05	10·10

633·88

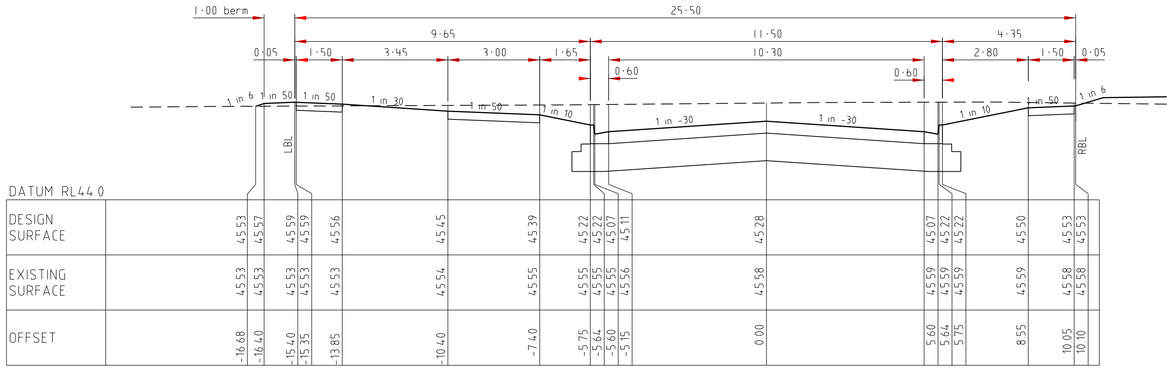

DATUM RL44·0

DESIGN SURFACE	45·53	45·57	45·59	45·59	45·56	45·45	45·39	45·22	45·22	45·07	45·11	45·28	45·07	45·22	45·22	45·50	45·53	45·53
EXISTING SURFACE	45·53	45·53	45·53	45·53	45·53	45·54	45·55	45·55	45·55	45·55	45·56	45·58	45·59	45·59	45·59	45·59	45·58	45·58
OFFSET	-16·68	-16·40	-15·40	-15·35	-13·85	-10·40	-7·40	-5·75	-5·64	-5·60	-5·15	0·00	5·60	5·64	5·75	8·55	10·05	10·10

752·17

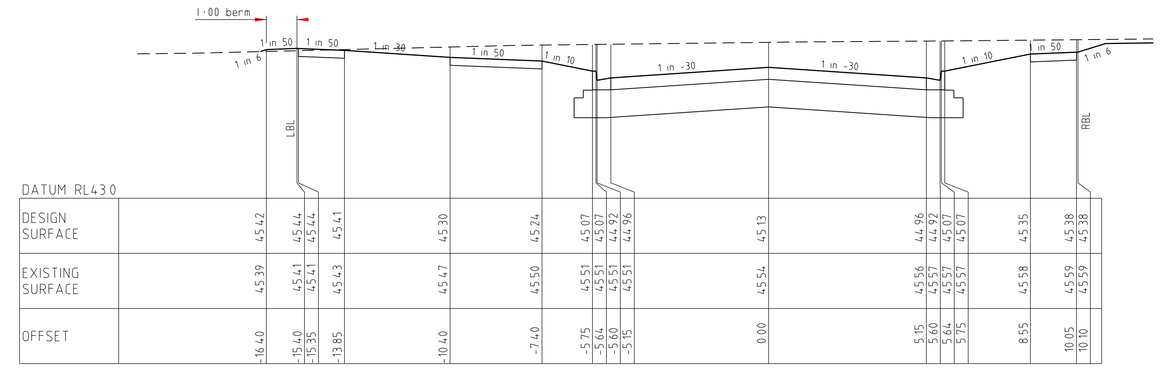

DATUM RL43·0

DESIGN SURFACE	45·42	45·44	45·44	45·41	45·30	45·24	45·07	45·07	44·92	44·96	45·13	44·96	44·92	45·07	45·07	45·35	45·38	45·38
EXISTING SURFACE	45·39	45·41	45·41	45·43	45·47	45·50	45·51	45·51	45·51	45·51	45·54	45·56	45·57	45·57	45·57	45·58	45·59	45·59
OFFSET	-16·40	-15·40	-15·35	-13·85	-10·40	-7·40	-5·75	-5·64	-5·60	-5·15	0·00	5·15	5·60	5·64	5·75	8·55	10·05	10·10

722·17

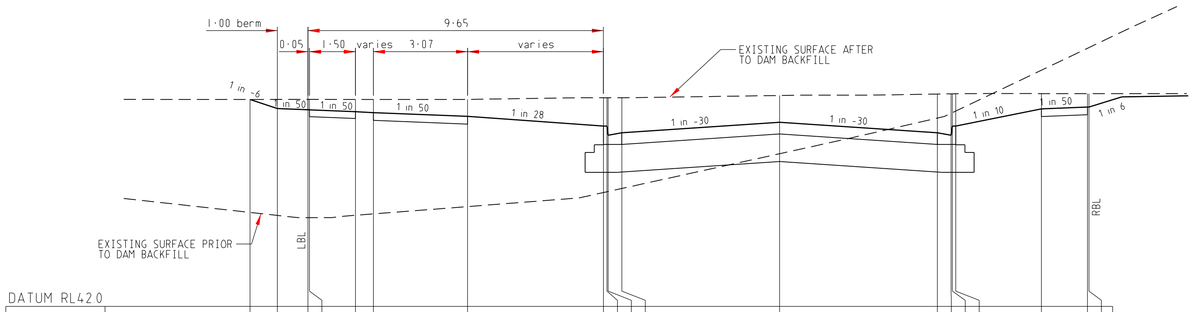

DATUM RL42·0

DESIGN SURFACE	45·38	45·23	45·21	45·21	45·18	45·16	45·10	44·94	44·94	44·79	44·83	45·00	44·83	44·79	44·94	44·94	45·22	45·25	45·25
EXISTING SURFACE	45·38	45·38	45·38	45·38	45·38	45·38	45·38	45·40	45·40	45·40	45·41	45·44	45·47	45·47	45·47	45·47	45·47	45·47	45·47
OFFSET	-17·29	-16·40	-15·40	-15·35	-13·85	-13·26	-10·19	-5·75	-5·64	-5·60	-5·15	0·00	5·15	5·60	5·64	5·75	8·55	10·05	10·10

695·92

AS CONSTRUCTED

HUMMINGBIRD BOULEVARD

CROSS SECTIONS No.2

SCALE HORIZONTAL 1:100
VERTICAL 1:50

NOTE: PAVEMENT CROWN LEVELS ARE BONING POINT LEVELS.

1:100 2 1 00 2 4 8
1:50 1 0.5 00 1 2 4

INDICATES CLASS 3 CRUSHED ROCK BACKFILL

AMENDMENTS		
A	23/01/19	ISSUED FOR CONSTRUCTION
VER.	DATE	REMARKS

breese pitt dixon pty. ltd.
land surveyors civil engineers
1/19 cato street
hawthorn east, 3123
telephone 8823 2300
fax no. 8823 2310

MELWAY REF. 234-F-2
SURVEY BPD
DESIGN NC
DRAWN NC
CHECKED

RIVERDALE VILLAGE
STAGE 20

MUNICIPALITY: WYNDHAM
REFERENCE: 8554 E/20

SCALE AS SHOWN | DATUM AHD | DATE JUN'18 | SHEET 7 OF 21 | A

I:\H8554\ENG\S120\E20_R07_HUKS2.dgn
Plotted:25/01/2019

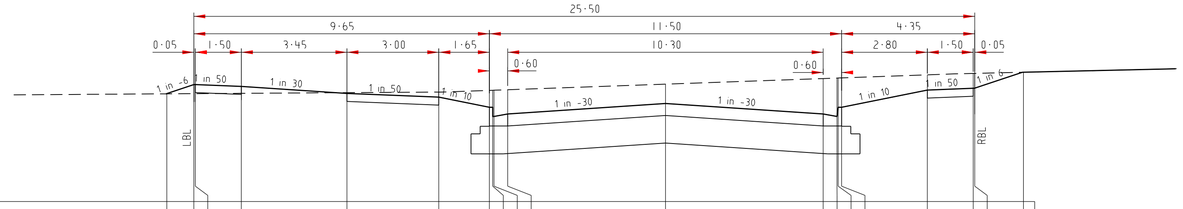

DATUM RL44.0

DESIGN SURFACE	45.76	45.91	45.91	45.88	45.76	45.70	45.54	45.54	45.39	45.43	45.60	45.43	45.39	45.54	45.54	45.82	45.85	45.85	46.11
EXISTING SURFACE	45.76	45.76	45.76	45.77	45.78	45.79	45.81	45.82	45.82	45.82	45.92	46.01	46.01	46.02	46.02	46.07	46.09	46.09	46.11
OFFSET	-16.28	-15.40	-15.35	-13.85	-10.40	-7.40	-5.75	-5.64	-5.60	-5.15	0.00	5.15	5.60	5.64	5.75	8.55	10.05	10.10	11.69

816.17

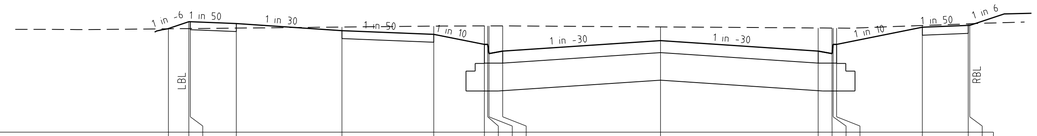

DATUM RL44.0

DESIGN SURFACE	45.69	45.80	45.80	45.77	45.66	45.60	45.43	45.43	45.28	45.32	45.49	45.32	45.28	45.43	45.43	45.71	45.74	45.74	
EXISTING SURFACE	45.69	45.69	45.69	45.70	45.72	45.73	45.73	45.73	45.73	45.73	45.72	45.70	45.70	45.70	45.70	45.74	45.77	45.77	
OFFSET	-16.07	-15.40	-15.35	-13.85	-10.40	-7.40	-5.75	-5.64	-5.60	-5.15	0.00	5.15	5.60	5.64	5.75	8.55	10.05	10.10	

794.58

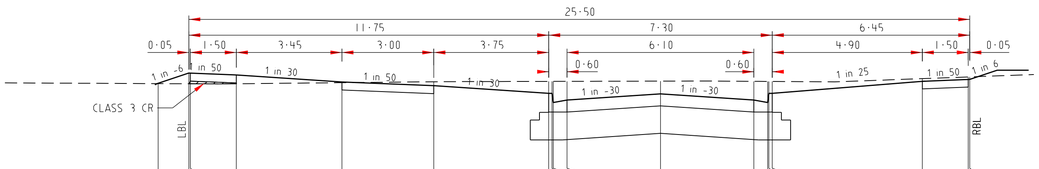

DATUM RL44.0

DESIGN SURFACE	45.63	45.80	45.80	45.77			45.47	45.47	45.32	45.36	45.46	45.36	45.32	45.47	45.47	45.67	45.70	45.70
EXISTING SURFACE	45.63	45.63	45.63	45.63	45.65	45.66	45.67	45.67	45.67	45.67	45.67	45.67	45.67	45.67	45.67	45.73	45.75	45.75
OFFSET	-16.40	-15.40	-15.35	-13.85	-10.40	-7.40	-3.65	-3.54	-3.50	-3.05	0.00	3.05	3.50	3.54	3.65	8.55	10.05	10.10

788.82

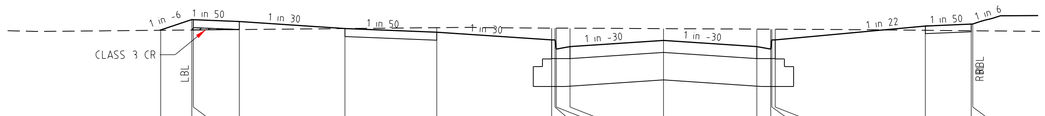

DATUM RL44.0

DESIGN SURFACE	45.50	45.68	45.68	45.65	45.53	45.47	45.35	45.35	45.20	45.24	45.34	45.24	45.20	45.35	45.35	45.57	45.60	45.60
EXISTING SURFACE	45.50	45.51	45.51	45.51	45.53	45.55	45.54	45.54	45.54	45.54	45.53	45.52	45.52	45.52	45.52	45.52	45.52	45.52
OFFSET	-16.42	-15.40	-15.35	-13.85	-10.40	-7.40	-3.65	-3.54	-3.50	-3.05	0.00	3.05	3.50	3.54	3.65	8.55	10.05	10.10

763.22

AS CONSTRUCTED

NOTE: PAVEMENT CROWN LEVELS ARE BONING POINT LEVELS.

HUMMINGBIRD BOULEVARD

CROSS SECTIONS No.3

SCALE HORIZONTAL 1:100
VERTICAL 1:50

1:100 2 1 00 2 4 8
1:50 1 0.5 00 1 2 4

INDICATES CLASS 3 CRUSHED ROCK BACKFILL

AMENDMENTS			
A	23/01/19	ISSUED FOR CONSTRUCTION	
VER.	DATE	REMARKS	

breese pitt dixon pty. ltd.
land surveyors civil engineers
1/19 cato street
hawthorn east, 3123
telephone 8823 2300
fax no. 8823 2310

MELWAY REF. 234-F-2
SURVEY BPD
DESIGN NC
DRAWN NC
CHECKED

RIVERDALE VILLAGE
STAGE 20

MUNICIPALITY: WYNDHAM
REFERENCE: 8554 E/20

SCALE AS SHOWN | DATUM AHD | DATE JUN'18 | SHEET 8 OF 21 | A

I:\H8554\ENG\S120\E20_RDB_HUXS3.dgn
Plotted:22/01/2019

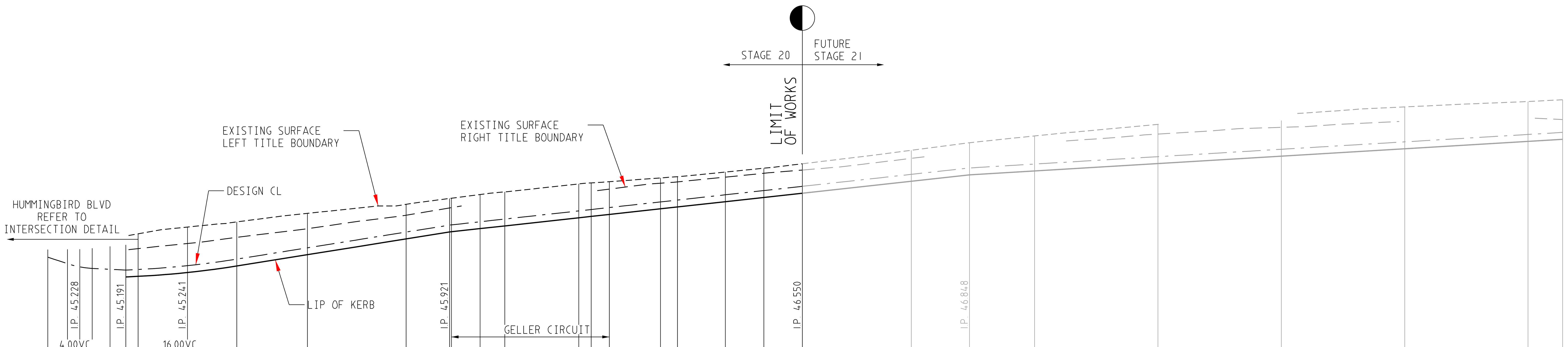

VC LENGTH: 4.00VC, 16.00VC

DESIGN GRADELINE: -3.33%, -0.50%, 0.50%, 1.60%, 1.10%, 1.10%, 0.60%

DATUM 43

ES LEFT TITLE BDY							45.78		45.89	45.97	46.11	46.26		46.35	46.36	46.42	46.46
FS LEFT TITLE BDY							45.35	45.38	45.41	45.52	45.70	45.95	45.98	46.07	46.07	46.12	46.17
LEFT LIP OF KERB						45.08	45.09		45.16	45.26	45.45	45.70	45.73	45.81	45.82	45.87	45.91
DESIGN CL	45.40	45.29	45.24	45.22	45.20	45.19	45.20		45.26	45.37	45.55	45.81		45.92	45.92	45.98	46.02
RIGHT LIP OF KERB						45.08	45.09		45.16	45.26	45.45	45.70	45.73	45.81	45.82	45.87	45.91
FS RIGHT TITLE BDY							45.34	45.37	45.40	45.50	45.69	45.94	45.97	46.06			
ES RIGHT TITLE BDY							45.54		45.62	45.72	45.86	46.08		46.20	46.20		
CHAINAGE CENTRE LINE	0.00	3.20	5.20	7.20	10.10	12.65	14.65		22.65	30.65	42.10	58.10		65.15	65.45	70.10	74.10
						TP								RTP			

ES LEFT TITLE BDY	46.59	46.61	46.63	46.69	46.71	46.78	46.84	46.92	47.13	47.26	47.37	47.55		47.84	47.93	47.95
FS LEFT TITLE BDY	46.30	46.32	46.35	46.44	46.47	46.56	46.63	46.70	46.89	46.99	47.06	47.18	47.30	47.42	47.54	47.57
LEFT LIP OF KERB	46.04	46.07	46.10	46.19	46.22	46.31	46.37	46.44	46.64	46.74	46.80	46.92	47.04	47.16	47.28	47.32
DESIGN CL	46.15	46.17	46.21	46.30	46.33	46.41	46.48	46.55	46.74	46.85	46.91	47.03	47.15	47.27	47.39	47.42
RIGHT LIP OF KERB	46.04	46.07	46.10	46.19	46.22	46.31	46.37	46.44	46.64	46.74	46.80	46.92	47.04	47.16	47.28	47.32
FS RIGHT TITLE BDY			46.34	46.43	46.46	46.55	46.62	46.68	46.88	46.98	47.05	47.17	47.29	47.41	47.53	47.55
ES RIGHT TITLE BDY			46.50	46.60	46.62	46.70	46.76	46.81	47.00			47.40	47.51			47.64
CHAINAGE CENTRE LINE	86.10	88.10	91.05	99.35	102.10	109.85	116.10	122.35	140.00	149.45	160.00	180.00	200.00	220.00	240.00	245.60
			RTP													

NOTE: LEFT IS THE TRUE LEFT IN DIRECTION OF INCREASING CHAINAGE

HOUDINI DRIVE

LONGITUDINAL SECTION

SCALE HORIZONTAL 1:500
VERTICAL 1:50

AS CONSTRUCTED

A1 SHEET
1:500 10 5 00 10 20 40
1:50 1 0.5 00 1 2 4

AMENDMENTS		
VER	DATE	REMARKS
A	23/01/19	ISSUED FOR CONSTRUCTION

breese pitt dixon pty. ltd.
land surveyors civil engineers
1/19 cato street hawthorn east, 3123
telephone 8823 2300
fax no. 8823 2310

MELWAY REF. 234-F-2
SURVEY BPD
DESIGN NC
DRAWN NC
CHECKED

RIVERDALE VILLAGE
STAGE 20

MUNICIPALITY WYNDHAM
REFERENCE 8554 E/20

SCALE AS SHOWN | DATUM AHD | DATE JUN'18 | SHEET 9 OF 21 | A

Plotted:22/01/2019
I:\H8554\ENG\ST20\E20_R09_HOLS.dgn

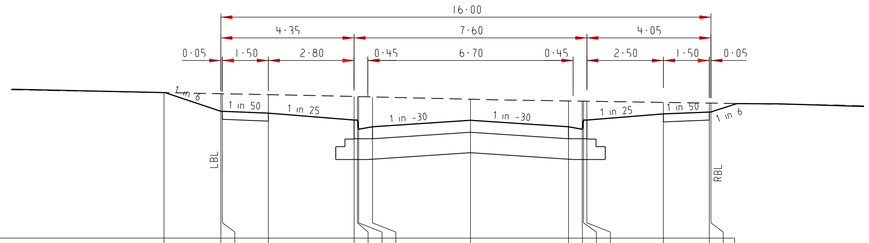

DATUM RL44.0

DESIGN SURFACE	46.37	46.07	46.07	46.04	45.93	45.93	45.78	45.82	45.92	45.82	45.78	45.93	45.93	46.03	46.06	46.06
EXISTING SURFACE	46.37	46.36	46.36	46.34	46.31	46.31	46.31	46.31	46.27	46.24	46.24	46.24	46.23	46.22	46.20	46.20
OFFSET	-10.01	-8.15	-8.10	-6.60	-3.80	-3.69	-3.65	-3.20	0.00	3.20	3.65	3.69	3.80	6.30	7.80	7.85

65.45

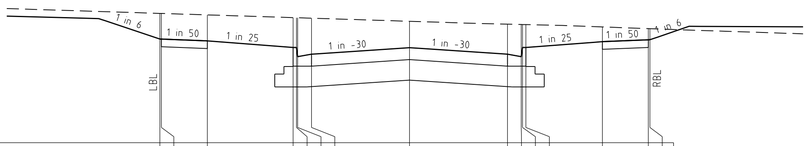

DATUM RL44.0

DESIGN SURFACE	45.70	45.70	45.67	45.56	45.56	45.54	45.47	45.45	45.55	45.45	45.41	45.56	45.56	45.66	45.69	45.69
EXISTING SURFACE	46.11	46.11	46.09	46.04	46.04	46.04	46.03	46.03	45.98	45.94	45.93	45.93	45.93	45.89	45.86	45.86
OFFSET	-8.15	-8.10	-6.60	-3.80	-3.69	-3.65	-3.20		0.00	3.20	3.65	3.69	3.80	6.30	7.80	7.85

42.10

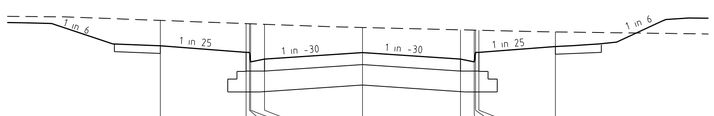

DATUM RL44.0

DESIGN SURFACE	45.31	45.19	45.19	45.19	45.04	45.08	45.19	45.08	45.04	45.19	45.19	45.29
EXISTING SURFACE	45.72	45.66	45.66	45.66	45.66	45.65	45.60	45.56	45.56	45.56	45.56	45.53
OFFSET	-6.60	-3.80	-3.69	-3.65	-3.20		0.00	3.20	3.65	3.69	3.80	6.30

12.65

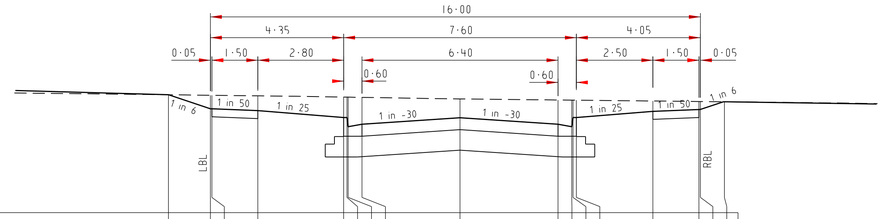

DATUM RL45.0

DESIGN SURFACE	46.92	46.70	46.70	46.67	46.55	46.55	46.40	46.44	46.55	46.44	46.40	46.55	46.55	46.65	46.68	46.68	46.81
EXISTING SURFACE	46.92	46.92	46.92	46.91	46.89	46.89	46.89	46.88	46.86	46.84	46.84	46.84	46.84	46.82	46.81	46.81	46.81
OFFSET	-9.52	-8.15	-8.10	-6.60	-3.80	-3.69	-3.65	-3.20	0.00	3.20	3.65	3.69	3.80	6.30	7.80	7.85	8.63

122.35

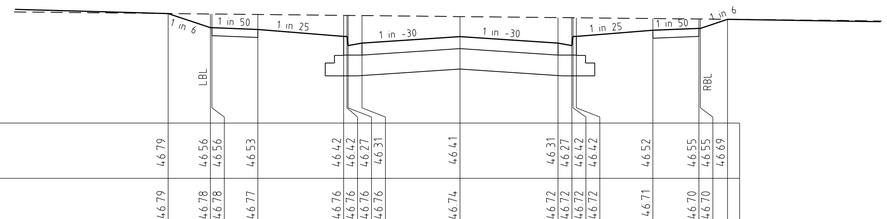

DATUM RL45.0

DESIGN SURFACE	46.79	46.56	46.56	46.53	46.42	46.42	46.27	46.31	46.41	46.31	46.27	46.42	46.42	46.52	46.55	46.55	46.69
EXISTING SURFACE	46.79	46.78	46.78	46.77	46.76	46.76	46.76	46.76	46.74	46.72	46.72	46.72	46.72	46.71	46.70	46.70
OFFSET	-9.53	-8.15	-8.10	-6.60	-3.80	-3.69	-3.65	-3.20	0.00	3.20	3.65	3.69	3.80	6.30	7.80	7.85

109.85

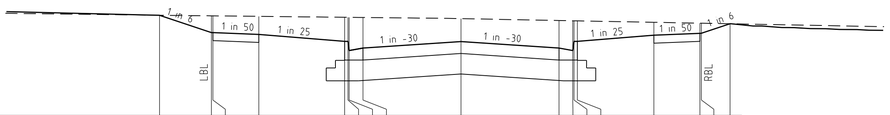

DATUM RL45.0

DESIGN SURFACE	46.63	46.35	46.35	46.32	46.21	46.21	46.06	46.10	46.21	46.10	46.06	46.21	46.21	46.31	46.34	46.34	46.50
EXISTING SURFACE	46.63	46.63	46.62	46.62	46.60	46.60	46.60	46.60	46.58	46.55	46.54	46.54	46.54	46.52	46.51	46.50	46.50
OFFSET	-9.84	-8.15	-8.10	-6.60	-3.80	-3.69	-3.65	-3.20	0.00	3.20	3.65	3.69	3.80	6.30	7.80	7.85	8.78

91.05

AS CONSTRUCTED

NOTE: PAVEMENT CROWN LEVELS ARE BONING POINT LEVELS.

HOUDINI DRIVE

CROSS SECTIONS

SCALE HORIZONTAL 1:100
VERTICAL 1:50

1:100 2 1 00 2 4 8
1:50 1 0.5 00 1 2 4

AMENDMENTS			
A	23/01/19	ISSUED FOR CONSTRUCTION	
VER.	DATE	REMARKS	

breese pitt dixon pty. ltd.
land surveyors civil engineers
1/19 cato street
hawthorn east, 3123
telephone 8823 2300
fax no. 8823 2310

MELWAY REF. 234-F-2
SURVEY BPD
DESIGN NC
DRAWN NC
CHECKED

RIVERDALE VILLAGE
STAGE 20

MUNICIPALITY WYNDHAM
REFERENCE 8554 E/20

SCALE AS SHOWN | DATUM AHD | DATE JUN'18 | SHEET 10 OF 21 | A

I:\H8554\ENG\ST20\E20_R10_HOXS.dgn
Plotted:20/01/2019

INDICATES CLASS 3 CRUSHED ROCK BACKFILL

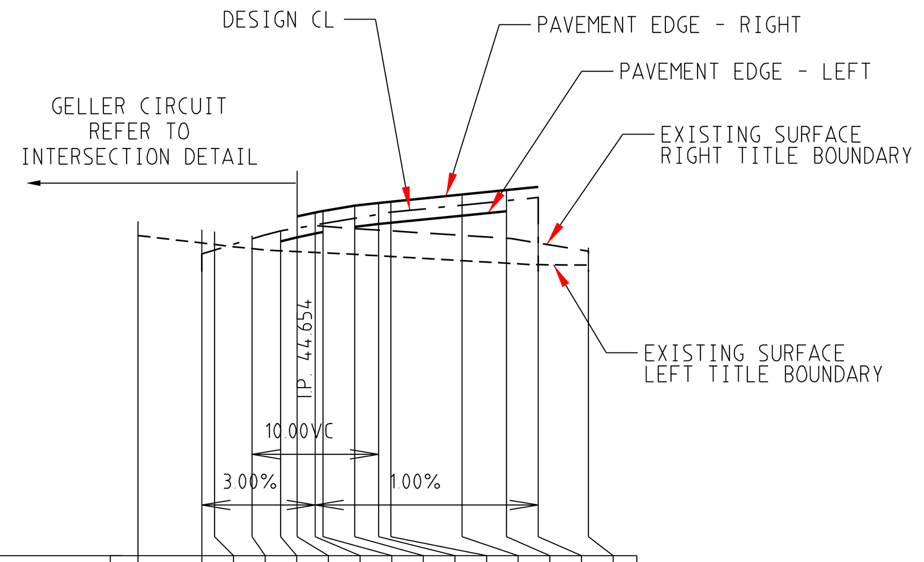

VC LENGTH

DESIGN GRADELINE

DATUM 42

ES LEFT TITLE BDY				44.42	44.41	44.40	44.39	44.39	44.38	44.37	44.36	44.33	44.31	44.30	44.30
FS LEFT TITLE BDY						44.38	44.41		44.44	44.46	44.47	44.53		44.61	
LEFT PAVEMENT EDGE						44.51	44.55		44.60	44.62	44.63	44.69		44.75	
DESIGN CL		44.38	44.41	44.50	44.57	44.60	44.63	44.64	44.68	44.70	44.71	44.77	44.80	44.83	
RIGHT PAVEMENT EDGE							44.71	44.72	44.76	44.79	44.80	44.85	44.89	44.91	
FS RIGHT TITLE BDY								44.95	44.99	45.02	45.03	45.08	45.12		
ES RIGHT TITLE BDY								44.60	44.58	44.57	44.57	44.53	44.51	44.48	44.43
CHAINAGE CENTRE LINE	0.00	5.06	6.05	9.02	11.28	12.58	14.02	14.63	17.13	19.02	20.00	25.63	29.13	31.63	35.60
						RTP								TP	

NOTE: LEFT IS THE TRUE LEFT IN DIRECTION OF INCREASING CHAINAGE

LONGITUDINAL SECTION

SCALE HORIZONTAL 1:500
VERTICAL 1:50

GELLER CIRCUIT

(EXTENDED DRIVE - LOTS 2019 & 2020)

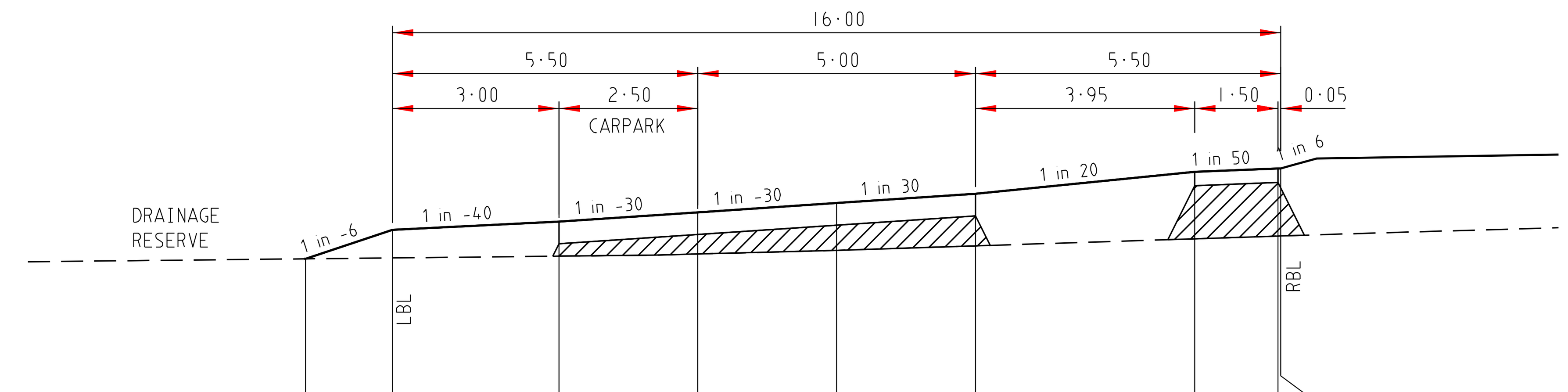

DATUM RL43.0

DESIGN SURFACE	44.30	44.56	44.64	44.72	44.80	44.89	45.09	45.12	45.12
EXISTING SURFACE	44.30	44.31	44.33	44.35	44.38	44.42	44.48	44.51	44.51
OFFSET	-9.56	-8.00	-5.00	-2.50	0.00	2.50	6.45	7.95	8.00

29.13

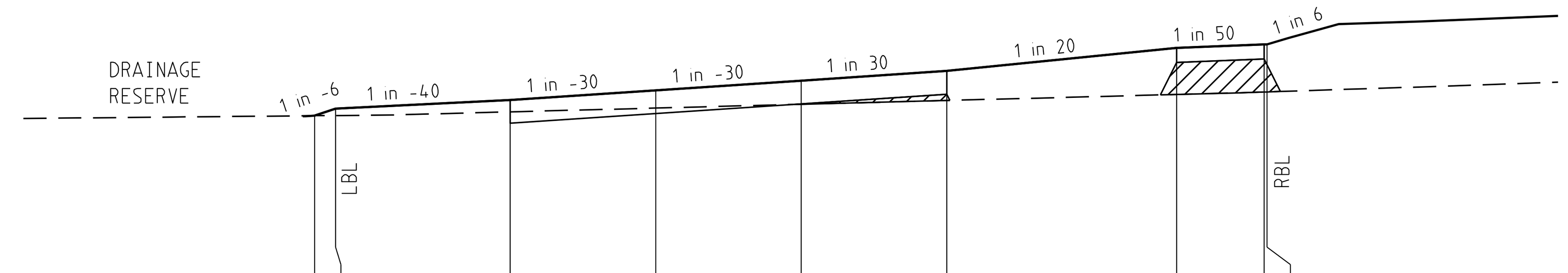

DATUM RL43.0

DESIGN SURFACE	44.38	44.44	44.51	44.60	44.68	44.76	44.96	44.99	44.99
EXISTING SURFACE	44.38	44.38	44.41	44.45	44.48	44.51	44.56	44.58	44.58
OFFSET	-8.36	-8.00	-5.00	-2.50	0.00	2.50	6.45	7.95	8.00

17.13

CROSS SECTIONS

SCALE HORIZONTAL 1:100
VERTICAL 1:50

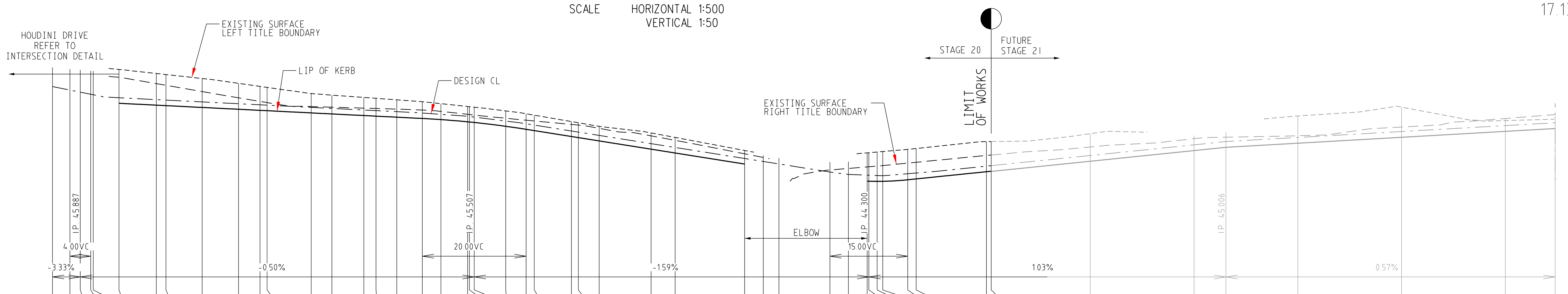

VC LENGTH

DESIGN GRADELINE

DATUM 42

ES LEFT TITLE BDY						46.39	46.32	46.30	46.22	46.13
FS LEFT TITLE BDY						45.98	45.95	45.94	45.90	45.87
LEFT LIP OF KERB						45.74	45.71	45.70	45.66	45.63
DESIGN CL	46.06	45.95	45.90	45.88	45.87	45.85	45.81	45.80	45.77	45.73
RIGHT LIP OF KERB						45.74	45.71	45.70	45.66	45.63
FS RIGHT TITLE BDY						46.00	45.96	45.95	45.92	45.88
ES RIGHT TITLE BDY						46.24	46.12	46.09	45.97	45.85
CHAINAGE CENTRE LINE	0.00	3.35	5.35	7.35	7.85	12.80	20.00	21.85	28.85	35.85
						TP				

ES LEFT TITLE BDY	46.07	46.05	45.93	45.90	45.86	45.84	45.81	45.77	45.74	45.68
FS LEFT TITLE BDY	45.85	45.84	45.80	45.78	45.75	45.74	45.72	45.69	45.67	45.63
LEFT LIP OF KERB	45.61	45.60	45.56	45.54	45.51	45.50	45.48	45.45	45.43	45.39
DESIGN CL	45.71	45.71	45.66	45.64	45.61	45.60	45.58	45.56	45.54	45.49
RIGHT LIP OF KERB	45.61	45.60	45.56	45.54	45.51	45.50	45.48	45.45	45.43	45.39
FS RIGHT TITLE BDY	45.86	45.85	45.81	45.79	45.76	45.75	45.73	45.70	45.68	45.64
ES RIGHT TITLE BDY	45.78	45.76	45.68	45.67	45.65	45.64	45.63	45.61	45.59	45.53
CHAINAGE CENTRE LINE	40.00	41.35	49.85	53.85	60.00	62.35	66.35	71.27	74.85	80.00

ES LEFT TITLE BDY	45.68	45.67	45.60	45.54	45.51	45.39	45.37	45.30	45.17	45.09
FS LEFT TITLE BDY	45.62	45.61	45.54	45.48	45.46	45.34	45.32	45.26	45.10	45.03
LEFT LIP OF KERB	45.38	45.37	45.30	45.24	45.22	45.10	45.08	45.02	44.86	44.79
DESIGN CL	45.49	45.48	45.41	45.35	45.32	45.21	45.19	45.12	44.97	44.89
RIGHT LIP OF KERB	45.38	45.37	45.30	45.24	45.22	45.10	45.08	45.02	44.86	44.79
FS RIGHT TITLE BDY	45.64	45.63	45.55	45.49	45.47	45.36	45.33	45.27	45.11	45.04
ES RIGHT TITLE BDY	45.53	45.52	45.46	45.42	45.40	45.34	45.32	45.26	45.12	45.03
CHAINAGE CENTRE LINE	80.35	81.27	87.35	91.27	92.85	100.00	101.35	105.35	115.35	120.00

ES LEFT TITLE BDY	44.83					44.79	44.79	44.80	44.81	44.86
FS LEFT TITLE BDY	44.81					44.50	44.50	44.49	44.49	44.52
LEFT LIP OF KERB	44.57					44.24	44.24	44.24	44.24	44.27
DESIGN CL	44.68	44.62	44.57	44.42	44.37	44.35	44.35	44.35	44.35	44.38
RIGHT LIP OF KERB	44.57					44.24	44.24	44.24	44.24	44.27
FS RIGHT TITLE BDY	44.83					44.48	44.48	44.48	44.48	44.51
ES RIGHT TITLE BDY	44.78	44.72		44.46	44.50	44.52	44.52	44.53	44.54	44.59
CHAINAGE CENTRE LINE	133.38	136.99	140.00	149.82	153.40	157.01	157.32	158.93	160.00	164.82
	LTP					LTP				

ES LEFT TITLE BDY	44.87	45.00	45.01	45.16			45.50	45.67	45.41	
FS LEFT TITLE BDY	44.54	44.68	44.69	44.88	45.08	45.15	45.23	45.34	45.45	45.51
LEFT LIP OF KERB	44.29	44.43	44.44	44.63	44.83	44.89	44.97	45.09	45.20	45.26
DESIGN CL	44.39	44.53	44.54	44.74	44.94	45.01	45.09	45.20	45.31	45.37
RIGHT LIP OF KERB	44.29	44.43	44.44	44.63	44.83	44.89	44.97	45.09	45.20	45.26
FS RIGHT TITLE BDY	44.53	44.67	44.68	44.87	45.07	45.14	45.21	45.33	45.44	45.50
ES RIGHT TITLE BDY	44.61	44.74	44.75	44.90	45.06	45.09	45.12	45.29	45.44	45.51
CHAINAGE CENTRE LINE	166.45	180.00	180.90	200.00	220.00	226.14	240.00	260.00	280.00	289.59

NOTE: LEFT IS THE TRUE LEFT IN DIRECTION OF INCREASING CHAINAGE

AS CONSTRUCTED

GELLER CIRCUIT

LONGITUDINAL SECTION

SCALE HORIZONTAL 1:500
VERTICAL 1:50

A1 SHEET

1:500 10 5 00 10 20 40
1:50 1 0.5 00 1 2 4

VER	DATE	REMARKS
A	23/01/19	ISSUED FOR CONSTRUCTION

AMENDMENTS

breese pitt dixon pty. ltd.
land surveyors civil engineers
1/19 cato street
hawthorn east, 3123
telephone 8823 2300
fax no. 8823 2310

MELWAY REF.	234-F-2
SURVEY	BPD
DESIGN	NC
DRAWN	NC
CHECKED	

RIVERDALE VILLAGE
STAGE 20

MUNICIPALITY WYNDHAM

REFERENCE 8554 E/20

SCALE AS SHOWN | DATUM AHD | DATE JUN'18 | SHEET 11 OF 21 | A

Plotted 22/01/2019

I:\8554\ENG\ST20\E20_R11_GELS.dgn

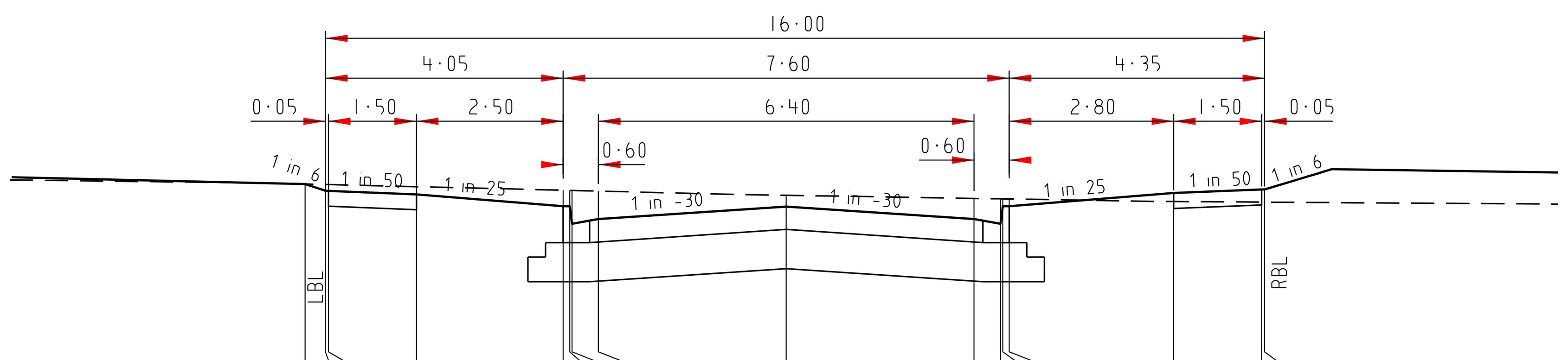

DATUM RL44.0

DESIGN SURFACE	45.68	45.62	45.62	45.59	45.49	45.49	45.34	45.38	45.49	45.38	45.34	45.49	45.49	45.60	45.63	45.63
EXISTING SURFACE	45.68	45.68	45.68	45.66	45.63	45.63	45.63	45.62	45.59	45.56	45.55	45.55	45.55	45.53	45.53	45.53
OFFSET	-8.20	-7.85	-7.80	-6.30	-3.80	-3.69	-3.65	-3.20	0.00	3.20	3.65	3.69	3.80	6.60	8.10	8.15

80.35

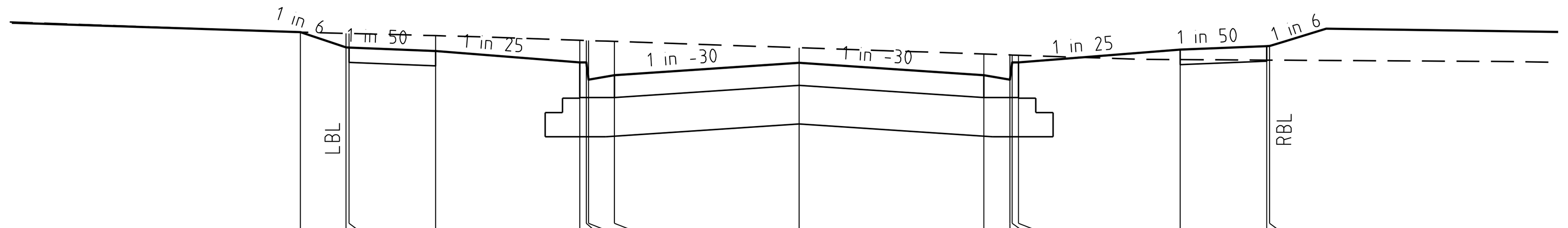

DATUM RL44.0

DESIGN SURFACE	45.91	45.78	45.78	45.75	45.65	45.65	45.50	45.54	45.64	45.54	45.50	45.65	45.65	45.76	45.79	45.79
EXISTING SURFACE	45.91	45.90	45.90	45.88	45.84	45.84	45.84	45.83	45.78	45.72	45.71	45.71	45.71	45.67	45.67	45.67
OFFSET	-8.64	-7.85	-7.80	-6.30	-3.80	-3.69	-3.65	-3.20	0.00	3.20	3.65	3.69	3.80	6.60	8.10	8.15

53.85

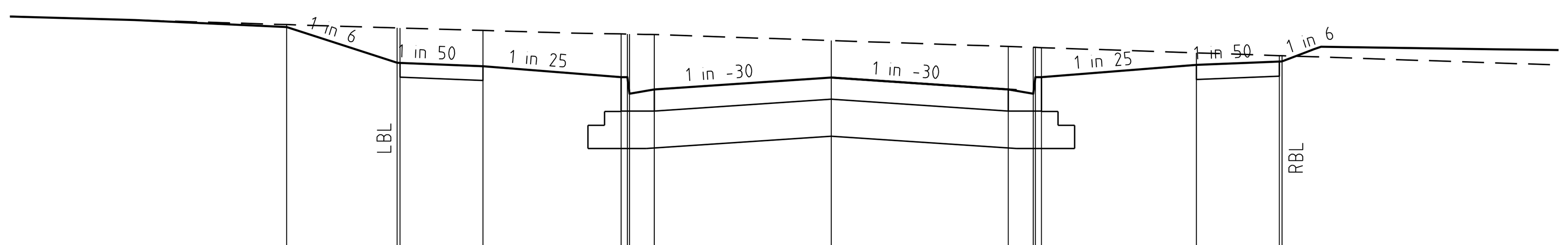

DATUM RL44.0

DESIGN SURFACE	46.22	45.90	45.90	45.87	45.77	45.77	45.62	45.66	45.77	45.66	45.62	45.77	45.77	45.88	45.91	45.91
EXISTING SURFACE	46.25	46.22	46.22	46.20	46.16	46.16	46.16	46.16	46.10	46.05	46.04	46.04	46.04	45.99	45.97	45.97
OFFSET	-9.85	-7.85	-7.80	-6.30	-3.80	-3.69	-3.65	-3.20	0.00	3.20	3.65	3.69	3.80	6.60	8.10	8.15

28.85

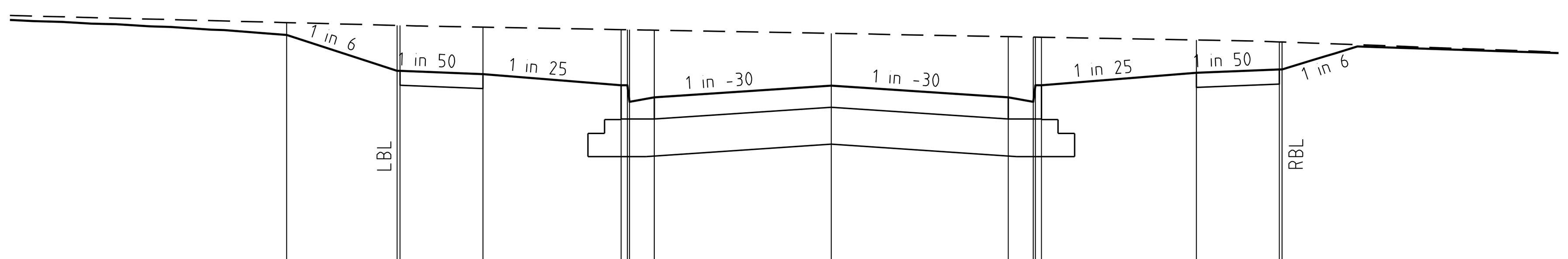

DATUM RL44.0

DESIGN SURFACE	46.30	45.98	45.98	45.95	45.85	45.85	45.70	45.74	45.85	45.74	45.70	45.85	45.85	45.96	45.99	45.99
EXISTING SURFACE	46.42	46.39	46.39	46.38	46.36	46.36	46.35	46.35	46.32	46.29	46.29	46.29	46.29	46.26	46.24	46.24
OFFSET	-9.85	-7.85	-7.80	-6.30	-3.80	-3.69	-3.65	-3.20	0.00	3.20	3.65	3.69	3.80	6.60	8.10	8.15

12.80

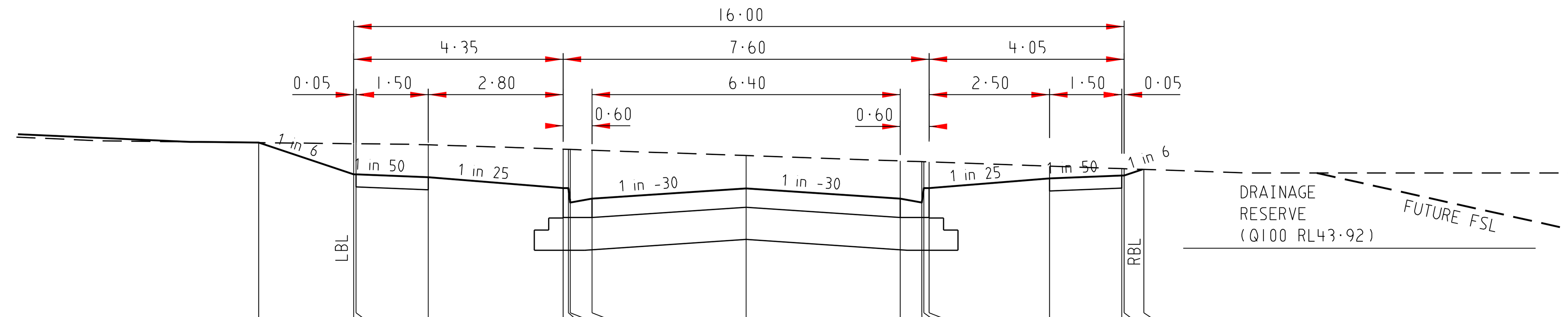

DATUM RL43.0

DESIGN SURFACE	45.02	44.69	44.69	44.66	44.55	44.55	44.40	44.44	44.54	44.44	44.40	44.55	44.55	44.65	44.68	44.68	44.74
EXISTING SURFACE	45.02	45.01	45.01	44.99	44.95	44.95	44.95	44.94	44.88	44.83	44.82	44.82	44.82	44.77	44.75	44.75	44.74
OFFSET	-10.12	-8.15	-8.10	-6.60	-3.80	-3.69	-3.65	-3.20	0.00	3.20	3.65	3.69	3.80	6.30	7.80	7.85	8.26

180.90

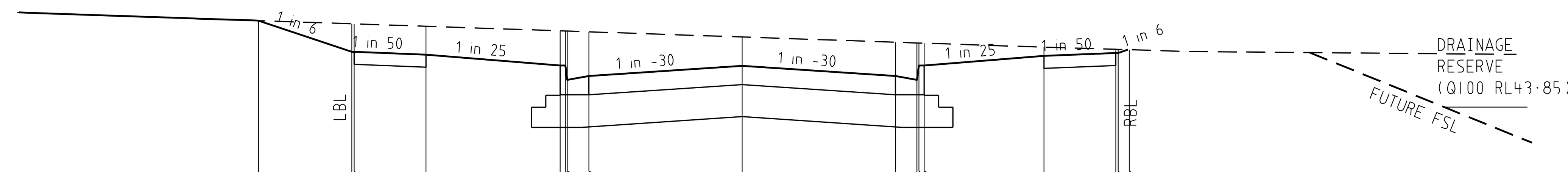

DATUM RL43.0

DESIGN SURFACE	44.82	44.50	44.50	44.47	44.35	44.35	44.20	44.24	44.35	44.24	44.20	44.35	44.35	44.45	44.48	44.48	44.52
EXISTING SURFACE	44.82	44.79	44.79	44.76	44.72	44.71	44.71	44.70	44.65	44.60	44.59	44.59	44.59	44.55	44.52	44.52	44.52
OFFSET	-10.10	-8.15	-8.10	-6.60	-3.80	-3.69	-3.65	-3.20	0.00	3.20	3.65	3.69	3.80	6.30	7.80	7.85	8.08

157.01

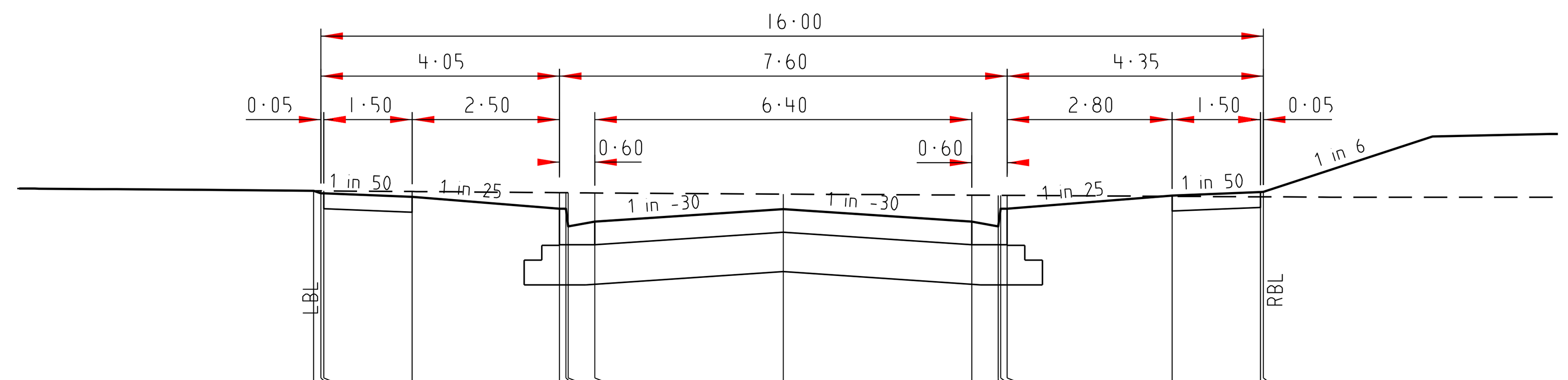

DATUM RL43.0

DESIGN SURFACE	44.84	44.81	44.81	44.78	44.68	44.68	44.53	44.57	44.68	44.57	44.53	44.68	44.68	44.79	44.82	44.82
EXISTING SURFACE	44.84	44.83	44.83	44.83	44.82	44.82	44.82	44.82	44.81	44.80	44.80	44.80	44.80	44.79	44.78	44.78
OFFSET	-7.97	-7.85	-7.80	-6.30	-3.80	-3.69	-3.65	-3.20	0.00	3.20	3.65	3.69	3.80	6.60	8.10	8.15

133.38

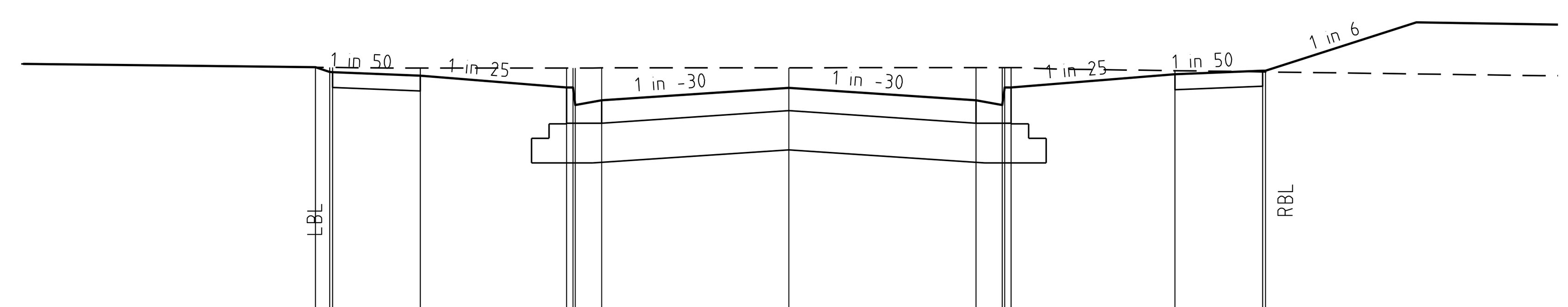

DATUM RL43.0

DESIGN SURFACE	45.30	45.26	45.26	45.23	45.13	45.13	44.98	45.02	45.12	45.02	44.98	45.13	45.13	45.24	45.27	45.27
EXISTING SURFACE	45.30	45.30	45.30	45.29	45.29	45.29	45.29	45.29	45.30	45.30	45.30	45.30	45.30	45.27	45.26	45.26
OFFSET	-8.09	-7.85	-7.80	-6.30	-3.80	-3.69	-3.65	-3.20	0.00	3.20	3.65	3.69	3.80	6.60	8.10	8.15

105.35

NOTE: PAVEMENT CROWN LEVELS ARE BONING POINT LEVELS.

1:100 2 1 00 2 4 8
1:50 1 0.5 00 1 2 4

AS CONSTRUCTED

GELLER CIRCUIT

CROSS SECTIONS

SCALE HORIZONTAL 1:100
VERTICAL 1:50

breese pitt dixon pty. ltd.
land surveyors civil engineers
1/19 cato street
hawthorn east, 3123
telephone 8823 2300
fax no. 8823 2310

AMENDMENTS		
A	23/01/19	ISSUED FOR CONSTRUCTION
VER	DATE	REMARKS

MELWAY REF.	234-F-2
SURVEY	BPD
DESIGN	NC
DRAWN	NC
CHECKED	

RIVERDALE VILLAGE
STAGE 20

MUNICIPALITY: WYNDHAM
REFERENCE: 8554 E/20

SCALE: AS SHOWN | DATUM: AHD | DATE: JUN'18 | SHEET: 12 OF 21 | A

Plotted:22/01/2019
I:\HB554\ENG\ST20\E20_R12_GEXS.dgn

INDICATES CLASS 3 CRUSHED ROCK BACKFILL

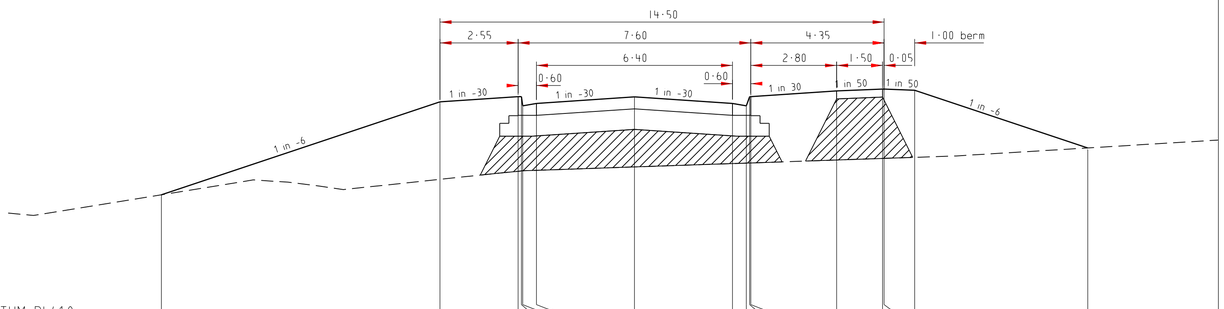

DATUM RL410

DESIGN SURFACE	43.04		44.56		44.64	44.64	44.49	44.53		44.64		44.53	44.49	44.64	44.64		44.74		44.77	44.77	44.75		43.80
EXISTING SURFACE	43.04		43.30		43.43	43.43	43.43	43.44		43.50		43.55	43.56	43.56	43.56		43.61		43.64	43.64	43.66		43.80
OFFSET	-15.45		-6.35		-3.80	-3.69	-3.65	-3.20		0.00		3.20	3.65	3.76	3.80		6.60		8.10	8.15	9.15		14.80

18.43

CROSS SECTIONS

SCALE HORIZONTAL 1:100
VERTICAL 1:50

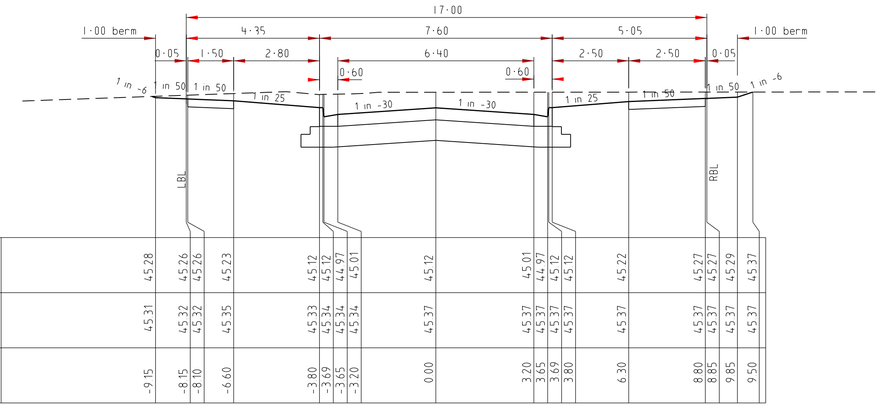

DATUM RL430

DESIGN SURFACE		45.28		45.26	45.26		45.23		45.12	45.12	44.97	45.01		45.12		45.01	44.97	45.12	45.12		45.22		45.27	45.27	45.29	45.37
EXISTING SURFACE		45.31		45.32	45.32		45.35		45.33	45.34	45.34	45.34		45.37		45.37	45.37	45.37	45.37		45.37		45.37	45.37	45.37	45.37
OFFSET		-9.15		-8.15	-8.10		-6.60		-3.80	-3.69	-3.65	-3.20		0.00		3.20	3.65	3.69	3.80		6.30		8.80	8.85	9.85	9.50

18.43

CROSS SECTIONS

SCALE HORIZONTAL 1:100
VERTICAL 1:50

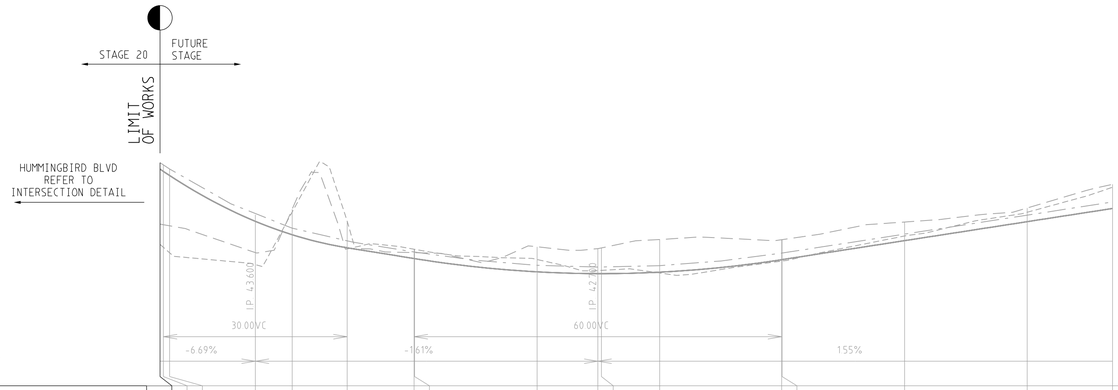

VC LENGTH

DESIGN GRADELINE

DATUM 41

ES LEFT TITLE BDY	43.29		43.26	43.17		42.98		43.83		43.69		43.23	43.23		43.06		42.88	42.88		42.84		43.03	43.04		43.45		43.83		44.20
FS LEFT TITLE BDY	44.56		44.52	44.46		43.71		43.69		43.28		43.10	43.10		42.88		42.86	42.86		42.88		43.08	43.08		43.39		43.70		43.92
LEFT LIP OF KERB	44.53		44.50	44.43		43.68		43.47		43.25		43.08	43.07		42.86		42.83	42.83		42.85		43.06	43.06		43.37		43.68		43.89
DESIGN CL	44.64		44.60	44.54		43.79		43.57		43.36		43.18	43.18		42.97		42.94	42.94		42.96		43.16	43.17		43.47		43.78		44.00
RIGHT LIP OF KERB	44.53		44.50	44.43		43.68		43.47		43.25		43.08	43.07		42.86		42.83	42.83		42.85		43.06	43.06		43.37		43.68		43.89
FS RIGHT TITLE BDY		44.73	44.66			43.92		43.70		43.49		43.31	43.31		43.09		43.06	43.06		43.09		43.29	43.29		43.60		43.91		44.13
ES RIGHT TITLE BDY		43.63	43.61			43.17		43.88		43.23		43.17	43.17		43.27		43.24	43.25		43.39		43.38	43.38		43.67		43.90		44.29
CHAINAGE CENTRE LINE	18.43	18.99	20.00		33.99		40.00		48.99		59.91	60.00		80.00		89.91	90.50		100.00		119.91	120.00		140.00		160.00		173.94

NOTE: LEFT IS THE TRUE LEFT IN DIRECTION OF INCREASING CHAINAGE

GRANADA DRIVE

LONGITUDINAL SECTION

SCALE HORIZONTAL 1:500
VERTICAL 1:50

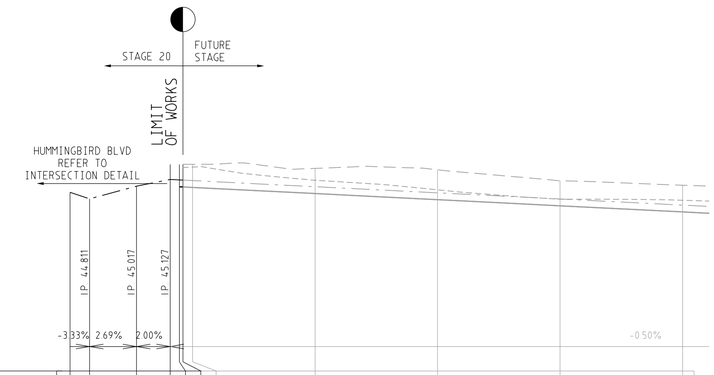

VC LENGTH

DESIGN GRADELINE

DATUM 42

ES LEFT TITLE BDY						45.32	45.33		45.11		44.96		44.80		44.79
FS LEFT TITLE BDY						45.26	45.25		45.15		45.05		44.95		44.85
LEFT LIP OF KERB						45.01	45.00		44.90		44.80		44.70		44.60
DESIGN CL	44.92	44.81		45.02	45.13	45.12	45.11		45.01		44.91		44.81		44.71
RIGHT LIP OF KERB						45.01	45.00		44.90		44.80		44.70		44.60
FS RIGHT TITLE BDY						45.27	45.26		45.16		45.06		44.96		44.86
ES RIGHT TITLE BDY						45.37	45.33		45.31		45.28		45.11		45.03
CHAINAGE CENTRE LINE	0.00	3.20		10.85	16.34	17.85	18.43	20.00		40.00		60.00		80.00		100.00

FIRMONA AVENUE

LONGITUDINAL SECTION

SCALE HORIZONTAL 1:500
VERTICAL 1:50

AS CONSTRUCTED

VER	DATE	REMARKS
A	23/01/19	ISSUED FOR CONSTRUCTION

AMENDMENTS

breese pitt dixon pty. ltd.
land surveyors civil engineers
1/19 cato street
hawthorn east, 3123
telephone 8823 2300
fax no. 8823 2310

MELWAY REF. 234-F-2
SURVEY BPD
DESIGN NC
DRAWN NC
CHECKED

RIVERDALE VILLAGE
STAGE 20

MUNICIPALITY: WYNDHAM

REFERENCE: 8554 E/20

SCALE AS SHOWN | DATUM AHD | DATE JUN'18 | SHEET 13 OF 21 | A

I:\HBS54\ENG\ST20\E20_R13_AGB.DGN

Plotted:21-Jun-2019

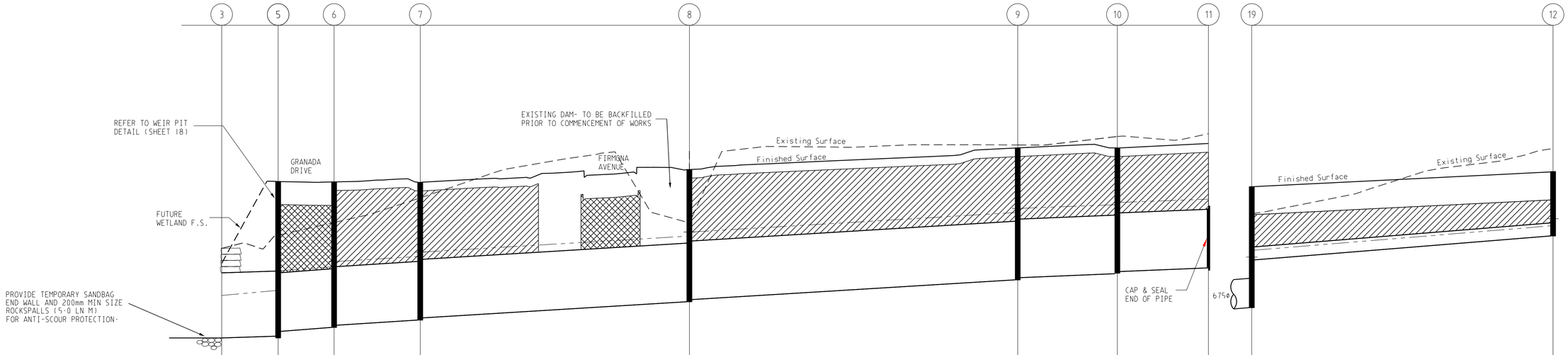

	3	5	6	7	8	9	10	11	19	12
VELOCITY (m/sec)	2.22m/s	3.12m/s	2.89m/s	2.89m/s	2.89m/s	2.36m/s	2.36m/s		1.22m/s	
DESIGN (m3/s)	Q5-03months 3.54m3/s	4.44m3/s	4.06m3/s	4.10m3/s	4.11m3/s	3.21m3/s	3.16m3/s		0.08m3/s	
CAPACITY (m3/s)	3.92m3/s	4.47m3/s	4.14m3/s	4.14m3/s	4.14m3/s	3.38m3/s	3.38m3/s		0.09m3/s	
DIAMETER AND TYPE (CLASS 2 UNLESS OTHERWISE STATED)	1500 RRJ	1350 RRJ	1350 RRJ	1350 RRJ	1350 RRJ	1350 RRJ	1350 RRJ		300 RRJ CLASS 3	
GRADE	1 in 326	1 in 143	1 in 167	1 in 167	1 in 167	1 in 250	1 in 250		1 in 126	
DATUM RL	37.0								37.0	
DEPTH FS TO INVERT	2.062	3.562 / 3.450	3.351 / 3.301	3.172 / 3.122	3.044 / 2.994	3.038 / 2.988	2.900 / 2.850	2.870	2.790 / 1.690	1.482
HGL LEVEL	42.079	42.191	42.737 / 42.861	42.976 / 43.079	43.444 / 43.540	43.988 / 44.085	44.168 / 44.223	44.296	42.920 / 42.963 / 43.121	43.682 / 43.847
INVERT	41.100	41.140 / 41.252	41.343 / 41.393	41.512 / 41.562	41.934 / 41.984	42.438 / 42.488	42.580 / 42.630	42.714	41.798 / 42.898	43.449
FINISHED SURFACE	43.162	44.702	44.694	44.684	44.978	45.476	45.480	45.584	44.587	44.931
NATURAL SURFACE	43.162	43.463	43.761	44.326	45.406	45.545	45.740	45.805	43.961	45.410
CHAINAGE	-13.028	0.000	12.889	32.751	94.795	170.484	193.454	214.434	0.000	69.451
	L=13.028m	L=12.889m	L=19.862m	L=62.044m	L=75.692m		L=22.970m	L=20.980m	L=69.451m	

INDICATES CLASS 3 CRUSHED ROCK BACKFILL

INDICATES CLASS 2 CRUSHED ROCK BACKFILL

INDICATES 5YR HGL

DRAINAGE LONGITUDINAL SECTIONS

SCALE HORIZONTAL 1:500
VERTICAL 1:50

PIT SCHEDULE

PIT No.	PIT DESCRIPTION	LENGTH	WIDTH	INLET INVERT	INLET DIA	OUTLET INVERT	OUTLET DIA	TOP PIT RL	DEPTH INVERT	REMARKS
2	END WALL	-	-	41.14	750			-	-	TEMPORARY SANDBAG ENDWALL
3	END WALL	-	-	41.10	1500			-	-	TEMPORARY SANDBAG ENDWALL
5	JUNCTION PIT	1200	2250	41.25	1350	41.21	750	44.70	3.56	REFER TO WEIR PIT DETAIL SHEET 18
				42.30	300	41.14	1500			
6	JUNCTION PIT	900	1600	41.39	1350	41.34	1350	44.69	3.35	EDCM STD DWG 605 (HAUNCHED)
				41.68	675					
				43.20	300					
7	CHANNEL GRATED PIT	900	1600	41.56	1350	41.51	1350	44.68	3.17	EDCM STD DWG 601 (HAUNCHED)
8	CHANNEL GRATED PIT	900	1600	41.98	1350	41.93	1350	44.98	3.04	EDCM STD DWG 601 (HAUNCHED)
				42.98	300					
9	JUNCTION PIT	1500	1600	42.49	1350	42.44	1350	45.48	3.04	EDCM STD DWG 605 (HAUNCHED), REFER DETAILS SHEET 18
				42.70	825					
10	CHANNEL GRATED PIT	900	1600	42.63	1350	42.58	1350	45.48	2.90	EDCM STD DWG 601 (HAUNCHED)
				43.63	300					
11	END OF PIPE					42.71	1350	45.58	2.87	BLANK END OF PIPE (future connection)
12	CHANNEL GRATED PIT	900	600	43.50	300	43.45	300	44.93	1.48	EDCM STD DWG 601
13	JUNCTION PIT	900	600			43.90	300	45.31	1.41	EDCM STD DWG 605
14	CHANNEL GRATED PIT	900	1050	42.91	825	42.86	825	45.22	2.36	EDCM STD DWG 601 (HAUNCHED), REFER DETAILS SHEET 18
				43.50	300					
15	CHANNEL GRATED PIT	900	1050	43.74	825	43.69	825	46.23	2.55	EDCM STD DWG 601 (HAUNCHED), REFER DETAILS SHEET 18
				44.48	300					
16	END OF PIPE					43.90	825	46.59	2.69	BLANK END OF PIPE (future connection)
17	CHANNEL GRATED PIT	900	600	43.97	300	43.92	300	45.48	1.56	EDCM STD DWG 601
18	END OF PIPE					44.08	300	45.58	1.50	BLANK END OF PIPE (future connection)
19	CHANNEL GRATED PIT	900	600	42.90	300			44.59	2.79	EDCM STD DWG 601
				41.85	675	41.80	675			
20	JUNCTION PIT	900	900	42.02	675	41.97	675	45.12	3.15	EDCM STD DWG 605 (HAUNCHED)
				43.67	225					
21	JUNCTION PIT	900	900	42.11	675	42.06	675	44.93	2.88	EDCM STD DWG 605 (HAUNCHED)
22	JUNCTION PIT	900	900	42.31	375	42.16	675	44.72	2.55	EDCM STD DWG 605 (HAUNCHED)
				42.21	525					

PIT No.	PIT DESCRIPTION	LENGTH	WIDTH	INLET INVERT	INLET DIA	OUTLET INVERT	OUTLET DIA	TOP PIT RL	DEPTH INVERT	REMARKS
23	CHANNEL GRATED PIT	900	600	43.03	375	42.98	375	44.71	1.73	EDCM STD DWG 601
24	CHANNEL GRATED PIT	900	600	43.15	375	43.10	375	44.71	1.62	EDCM STD DWG 601
25	JUNCTION PIT	900	600	43.59	300	43.52	375	45.11	1.59	EDCM STD DWG 605
				43.59	300					
26	CHANNEL GRATED PIT	900	600	43.99	300	43.94	300	45.59	1.65	EDCM STD DWG 601
				43.99	300					
27	JUNCTION PIT	900	600	44.34	225	44.29	300	45.80	1.50	EDCM STD DWG 605
28	END OF PIPE					45.65	225	46.69	1.04	BLANK END OF PIPE (future connection)
29	JUNCTION PIT	900	600	44.49	225	44.44	225	45.53	1.09	EDCM STD DWG 605
30	JUNCTION PIT	900	600			45.09	225	45.87	0.78	EDCM STD DWG 605
31	CHANNEL GRATED PIT	900	900	42.39	450	42.34	525	44.37	2.04	EDCM STD DWG 601 (HAUNCHED)
				42.56	300					
32	END OF PIPE					42.61	450	44.58	1.97	BLANK END OF PIPE (future connection)
33	JUNCTION PIT	900	600	44.61	225	44.56	300	45.42	0.85	EDCM STD DWG 605
34	JUNCTION PIT	900	600			45.70	225	46.48	0.78	EDCM STD DWG 605
35	CHANNEL GRATED PIT	900	600			44.12	300	45.59	1.47	EDCM STD DWG 601
36	CHANNEL GRATED PIT	900	600			43.74	300	45.22	1.47	EDCM STD DWG 601
37	CHANNEL GRATED PIT	900	600	42.55	300	42.50	300	44.49	1.99	EDCM STD DWG 601
38	CHANNEL GRATED PIT	900	600			43.03	300	44.46	1.44	EDCM STD DWG 601
39	CHANNEL GRATED PIT	900	600			44.76	300	46.23	1.47	EDCM STD DWG 601
40	CHANNEL GRATED PIT	900	600			42.90	300	44.37	1.47	EDCM STD DWG 601
41	CHANNEL GRATED PIT	900	600			43.30	300	44.65	1.35	EDCM STD DWG 601
42	END OF PIPE					43.08	300	45.38	2.30	BLANK END OF PIPE (future connection)

AS CONSTRUCTED

1:50 1 0.5 00 1 2 4
1:500 10 5 00 10 20 40

AMENDMENTS

VER.	DATE	REMARKS
D	24/10/19	DRAIN LINE 8-42 ADDED
C	2/07/19	DRAIN LINE 3-5 ALTERED. STEP IN OUTFALL CHANNEL REMOVED. PIT 2 ADDED TO PIT SCHEDULE
B	9/05/19	ROCK ENDWALL DETAIL REMOVED. OUTFALL DRAIN AT PIT 3 REVISED. PITS 1 & 2 REVISED TO FUTURE
A	23/01/19	ISSUED FOR CONSTRUCTION

breese pitt dixon pty. ltd.
land surveyors civil engineers
1/19 cato street
hawthorn east, 3123
telephone 8823 2300
fax no. 8823 2310

MELWAY REF. 234-F-2
SURVEY BPD
DESIGN NC
DRAWN NC
CHECKED

RIVERDALE VILLAGE STAGE 20

MUNICIPALITY: WYNDHAM
REFERENCE: 8554 E/20
SCALE AS SHOWN | DATUM AHD | DATE JUN'18 | SHEET 14 OF 21 | D

Plotted:24/10/2019
I:\H855\ENG\ST20\E20_R14_DRN1.dgn

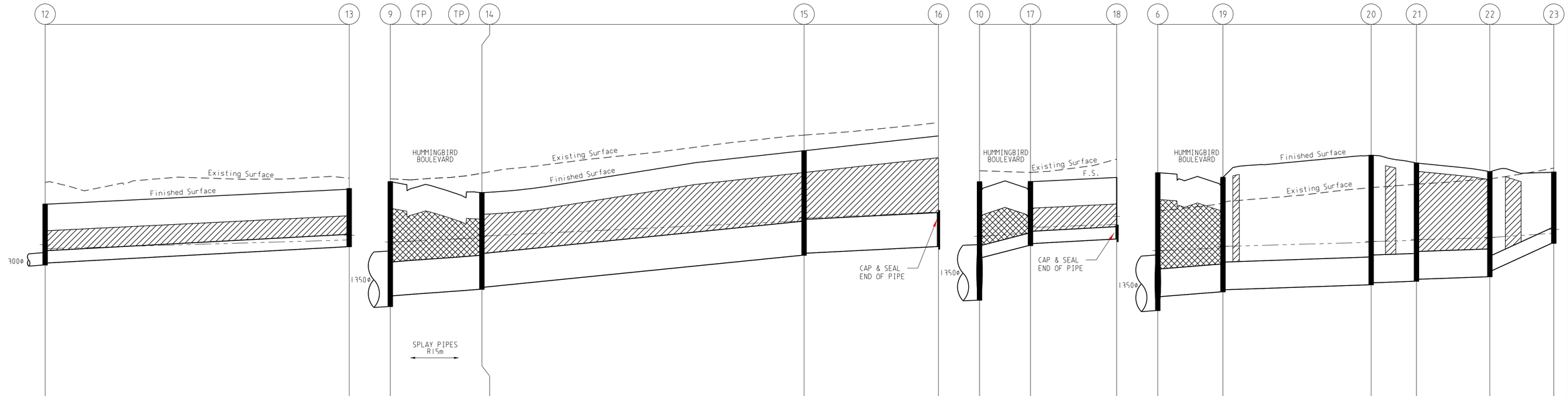

VELOCITY (m/sec)	1.00m/s								2.27m/s	2.67m/s					1.90m/s			2.05m/s	1.00m/s		2.02m/s	1.36m/s		1.36m/s		1.36m/s		3.28m/s
DESIGN (m3/s)	0.04m3/s								0.98m3/s	0.98m3/s					0.96m3/s			0.08m3/s	0.06m3/s		0.51m3/s	0.44m3/s		0.40m3/s		0.40m3/s		0.11m3/s
CAPACITY (m3/s)	0.07m3/s								1.21m3/s	1.43m3/s					1.02m3/s			0.14m3/s	0.07m3/s		0.72m3/s	0.49m3/s		0.49m3/s		0.49m3/s		0.36m3/s
DIAMETER AND TYPE (CLASS 2 UNLESS OTHERWISE STATED)	300 RRJ CLASS 4								825 RRJ	825 RRJ					825 RRJ			CLASS 4 300 RRJ	300 RRJ		675 RRJ	675 RRJ		675 RRJ		675 RRJ		375 RRJ
GRADE	1 in 187								1 in 140	1 in 101					1 in 200			1 in 426	1 in 187		1 in 135	1 in 300		1 in 300		1 in 300		1 in 235
DATUM RL	38.0								38.0									38.0			37.0							
DEPTH FS TO INVERT	1.482	1.432						1.421	3.038	2.775	2.566	2.345	2.356	2.306			2.547	2.497		2.693	3.351	3.014		2.790	2.740		3.151	3.101	2.875	2.825	2.553	2.403	1.734
HGL LEVEL	43.682	43.847						44.058	43.913	44.010	44.032	44.087	44.113	44.156			44.524	44.593		44.739	42.680	42.801		42.860	42.903		43.001	43.022	43.047	43.068	43.108	43.122	43.219
								44.175												45.538														43.315
INVERT	43.469	43.499						43.895	42.438	42.701	42.735	42.819	42.859	42.909			43.687	43.737		43.900	42.580	42.630		42.798	41.848		41.968	42.018	42.055	42.105	42.164	42.314	42.977
FINISHED SURFACE	44.931							45.316	45.476	45.302	45.164	45.215					46.234			46.593	45.480		44.587				45.119		44.930		44.717		44.711
NATURAL SURFACE	45.410							45.561	45.545	45.519	45.600	45.683					46.608			46.914	45.740		43.961				44.331		44.414		44.545		44.806
CHAINAGE	69.451							143.444	0.000	4.880	16.661	22.280					100.680			133.373	0.000		12.400				33.380							80.502
	L=73.992m								L=4.880m	L=11.781m	L=5.619m				L=78.400m					L=32.692m	L=12.400m			L=20.980m										
																					L=15.849m					L=36.060m			L=11.030m		L=17.851m		L=15.561m

DRAINAGE LONGITUDINAL SECTIONS

SCALE HORIZONTAL 1:500
VERTICAL 1:50

INDICATES CLASS 3 CRUSHED ROCK BACKFILL

INDICATES CLASS 2 CRUSHED ROCK BACKFILL

INDICATES 5YR HGL

AS CONSTRUCTED

1:50 1 0.5 00 1 2 4
1:500 10 5 00 10 20 40

VER.	DATE	REMARKS
A	23/01/19	ISSUED FOR CONSTRUCTION

AMENDMENTS

breese pitt dixon pty. ltd.
land surveyors civil engineers
1/19 cato street
hawthorn east, 3123
telephone 8823 2300
fax no. 8823 2310

MELWAY REF. 234-F-2
SURVEY BPD
DESIGN NC
DRAWN NC
CHECKED

RIVERDALE VILLAGE STAGE 20

MUNICIPALITY: WYNDHAM
REFERENCE: 8554 E/20

SCALE AS SHOWN | DATUM AHD | DATE JUN'18 | SHEET 15 OF 21 | A

I:\H8554\ENG\ST20\E20_R15_DRN2.dgn
Plotted:22/01/2019

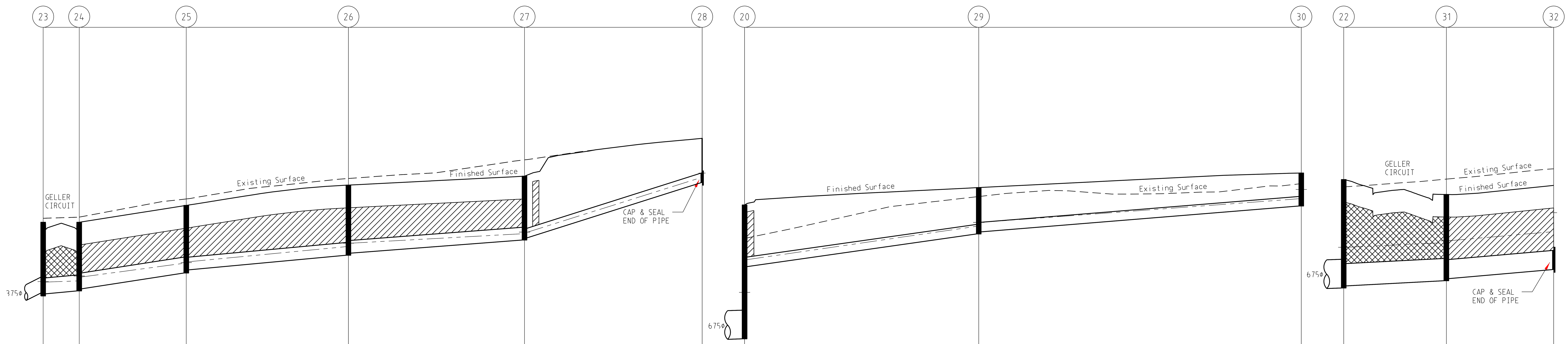

	23–24	24–25	25–26	26–27	27–28
VELOCITY (m/sec)	1.42m/s	1.93m/s	1.30m/s	1.18m/s	2.00m/s
DESIGN (m3/s)	0.10m3/s	0.10m3/s	0.07m3/s	0.04m3/s	0.02m3/s
CAPACITY (m3/s)	0.16m3/s	0.21m3/s	0.09m3/s	0.08m3/s	0.08m3/s
DIAMETER AND TYPE (CLASS 2 UNLESS OTHERWISE STATED)	CLASS 4 375 RRJ	375 RRJ	300 RRJ	300 RRJ CLASS 3	225 RRJ
GRADE	1 in 125	1 in 67.9	1 in 111	1 in 135	1 in 32
DATUM RL	38.0				
	L=8.500m	L=25.223m	L=38.200m	L=41.500m	L=41.850m

	23	23–24 start	24	24–25 start	25	25–26 start	26	26–27 start	27	27–28 start	28	28 (beyond)
DEPTH FS TO INVERT	1.734	1.684	1.616	1.566	1.591	1.516	1.651	1.601	1.503	1.453	1.037	
HGL LEVEL	43.219	43.315 43.303	43.330	43.447 43.424	43.746	43.762 43.782	44.137	44.219	44.442	44.481 44.474	45.770	45.869
INVERT	42.977	43.027	43.095	43.145	43.516	43.591	43.935	43.985	44.293	44.343	45.650	
FINISHED SURFACE	44.711		44.711		45.103		45.586		45.796		46.687	
NATURAL SURFACE	44.806		44.833		45.261		45.742		46.180		46.684	
CHAINAGE	80.502		89.002		114.225		152.425		193.925		235.775	

	20–29	29–30
VELOCITY (m/sec)	1.33m/s	1.01m/s
DESIGN (m3/s)	0.05m3/s	0.04m3/s
CAPACITY (m3/s)	0.05m3/s	0.04m3/s
DIAMETER AND TYPE (CLASS 2 UNLESS OTHERWISE STATED)	225 RRJ	225 RRJ
GRADE	1 in 71.8	1 in 125
DATUM RL	38.0	
	L=55.172m	L=76.000m

	20	20–29 start	29	29–30 start	30	30 (beyond)
DEPTH FS TO INVERT	3.151	1.451	1.092	1.042	0.777	
HGL LEVEL	43.003	43.024 43.832	44.616	44.708	45.265	45.484
INVERT	41.968	43.668	44.436	44.486	45.094	
FINISHED SURFACE	45.119		45.528		45.871	
NATURAL SURFACE	44.331		45.317		45.621	
CHAINAGE	0.000		55.172		131.172	

	22–31	31–32
VELOCITY (m/sec)	1.41m/s	1.67m/s
DESIGN (m3/s)	0.29m3/s	0.26m3/s
CAPACITY (m3/s)	0.30m3/s	0.27m3/s
DIAMETER AND TYPE (CLASS 2 UNLESS OTHERWISE STATED)	525 RRJ	450 RRJ
GRADE	1 in 200	1 in 115
DATUM RL	37.0	
	L=24.180m	L=25.287m

	22	22–31 start	31	31–32 start	32	32 (beyond)
DEPTH FS TO INVERT	2.553	2.503	2.035	1.985	1.974	
HGL LEVEL	43.108	43.122	43.231	43.276	43.491	43.938
INVERT	42.164	42.214	42.335	42.385	42.605	
FINISHED SURFACE	44.717		44.370		44.579	
NATURAL SURFACE	44.545		44.728		44.970	
CHAINAGE	0.000		24.180		49.467	

DRAINAGE LONGITUDINAL SECTIONS

SCALE HORIZONTAL 1:500
VERTICAL 1:50

INDICATES CLASS 3 CRUSHED ROCK BACKFILL
INDICATES CLASS 2 CRUSHED ROCK BACKFILL
INDICATES 5YR HGL

AS CONSTRUCTED

1:50 1 0.5 00 1 2 4
1:500 10 5 00 10 20 40

VER	DATE	REMARKS
A	23/01/19	ISSUED FOR CONSTRUCTION

AMENDMENTS

breese pitt dixon pty. ltd.
land surveyors civil engineers
1/19 cato street
hawthorn east, 3123
telephone 8823 2300
fax no. 8823 2310

MELWAY REF.	234-F-2
SURVEY	BPD
DESIGN	NC
DRAWN	NC
CHECKED	

RIVERDALE VILLAGE
STAGE 20

MUNICIPALITY WYNDHAM
REFERENCE 8554 E/20

SCALE AS SHOWN | DATUM AHD | DATE JUN'18 | SHEET 16 OF 21 | A

Plotted:22/01/2019

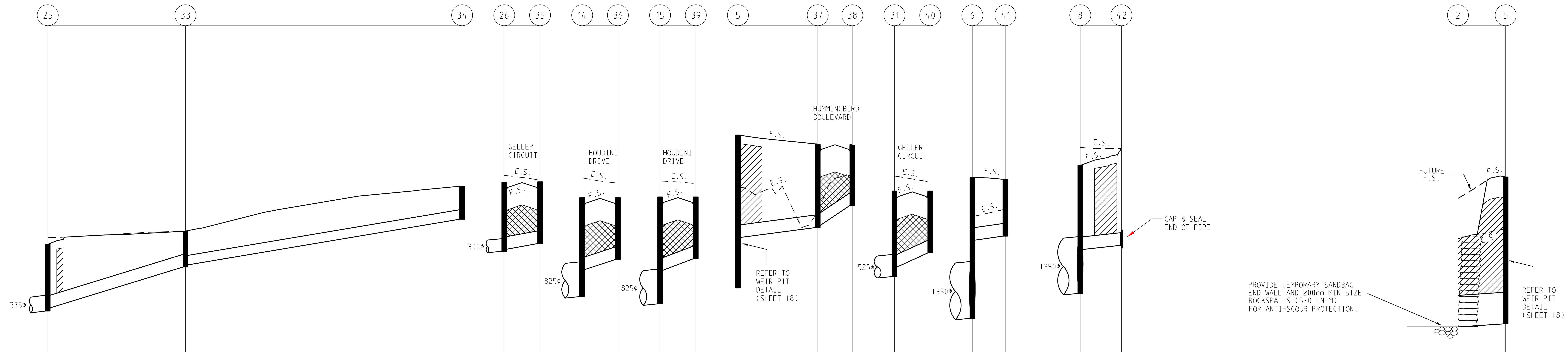

Reach	Velocity (m/sec)	Design (m3/s)	Capacity (m3/s)	Diameter and type (Class 2 unless otherwise stated)	Grade	Datum RL	Length
25–33	2.36m/s	0.03m3/s	0.17m3/s	300 RRJ	1 in 33.6	39.0	L=32.694m
33–34	1.45m/s	0.04m3/s	0.06m3/s	225 RRJ	1 in 60.5		L=65.700m
26–35	1.73m/s	0.01m3/s	0.12m3/s	CLASS 4 300 RRJ	1 in 62.8	38.0	L=8.510m
14–36	2.31m/s	0.01m3/s	0.16m3/s	CLASS 4 300 RRJ	1 in 35	38.0	L=8.500m
15–39	2.49m/s	0.01m3/s	0.18m3/s	CLASS 4 300 RRJ	1 in 30.2	39.0	L=8.500m
5–37	1.40m/s	0.01m3/s	0.10m3/s	300 RRJ	1 in 95.9	36.0	L=18.958m
37–38	3.30m/s	0.00m3/s	0.23m3/s	CLASS 4 300 RRJ	1 in 17.2		L=8.200m
31–40	2.73m/s	0.01m3/s	0.19m3/s	CLASS 4 300 RRJ	1 in 25.2	37.0	L=8.500m
6–41	1.53m/s	0.00m3/s	0.11m3/s	300 RRJ	1 in 80.4	37.0	L=7.841m
8–42	1.38m/s	0.06m3/s	0.10m3/s	300 RRJ	1 in 97.8	37.0	L=9.775m
2–5	2.00m/s	Q3months 0.88m3/s	0.88m3/s	750 RRJ (Class 2)	1 in 159	37.0	L=11.336m

Pit	Depth FS to invert	HGL level	Invert	Finished surface	Natural surface	Chainage
25	1.586 / 1.511	43.747 / 43.762	43.516 / 43.591	45.103	45.261	0.000
33	0.853 / 0.803	44.705 / 44.738 44.742	44.563 / 44.613	45.416	45.417	32.694
34	0.781	45.859 / 46.069	45.700	46.480	46.485	98.394
26	1.651 / 1.601	44.138 / 44.220	43.935 / 43.985	45.586	45.742	0.000
35	1.472	44.215 / 44.219	44.121	45.593	45.637	8.510
14	2.356 / 1.715	44.158 / 44.201	42.859 / 43.500	45.215	45.683	0.000
36	1.473	44.202 / 44.206	43.743	45.215	45.556	8.500
15	2.547 / 1.754	44.570 / 44.638	43.687 / 44.480	46.234	46.608	0.000
39	1.473	44.828 / 44.832	44.761	46.234	46.547	8.500
5	3.600 / 2.400	42.197 / 42.727 42.636	41.102 / 42.302	44.702	43.463	0.000
37	1.986 / 1.936	42.634 / 42.646	42.500 / 42.550	44.486	42.871	18.958
38	1.436	43.066 / 43.067	43.028	44.464	43.718	27.158
31	2.035 / 1.810	43.233 / 43.279	42.335 / 42.560	44.370	44.728	0.000
40	1.473	43.280 / 43.291	42.898	44.370	44.584	8.500
6	3.351 / 1.494	42.724 / 42.846 43.228	41.343 / 43.200	44.694	43.761	0.000
41	1.350	43.330	43.298	44.648	43.938	7.841
8	3.044 / 1.998	43.444 / 43.540	41.934 / 42.980	44.978	45.406	0.000
42	2.298	43.575 / 43.643	43.080	45.378	45.378	9.775
2	2.095	42.050	41.139	43.234	43.234	0.000
5	3.492	42.121 / 42.959	41.210	44.702	43.463	11.336

DRAINAGE LONGITUDINAL SECTIONS

SCALE HORIZONTAL 1:500
VERTICAL 1:50

INDICATES CLASS 3 CRUSHED ROCK BACKFILL

INDICATES CLASS 2 CRUSHED ROCK BACKFILL

INDICATES 5YR HGL

1:50 1 0.5 00 1 2 4
1:500 10 5 00 10 20 40

AS CONSTRUCTED

VER	DATE	REMARKS
D	24/10/19	LINE 8-42 ADDED
C	2/07/19	LINE 2-5 ADDED
B	9/05/19	LINES 1-2-5 REMOVED FROM STAGE WORKS
A	23/01/19	ISSUED FOR CONSTRUCTION

AMENDMENTS

breese pitt dixon pty. ltd.
land surveyors civil engineers
1/19 cato street
hawthorn east, 3123
telephone 8823 2300
fax no. 8823 2310

MELWAY REF.	234-F-2
SURVEY	BPD
DESIGN	NC
DRAWN	NC
CHECKED	

RIVERDALE VILLAGE
STAGE 20

MUNICIPALITY WYNDHAM

REFERENCE 8554 E/20

SCALE AS SHOWN DATUM AHD DATE JUN'18 SHEET 17 OF 21 D

Plotted:24/10/2019

I:\8554\ENG\ST20\E20_R17_DRN4.dgn

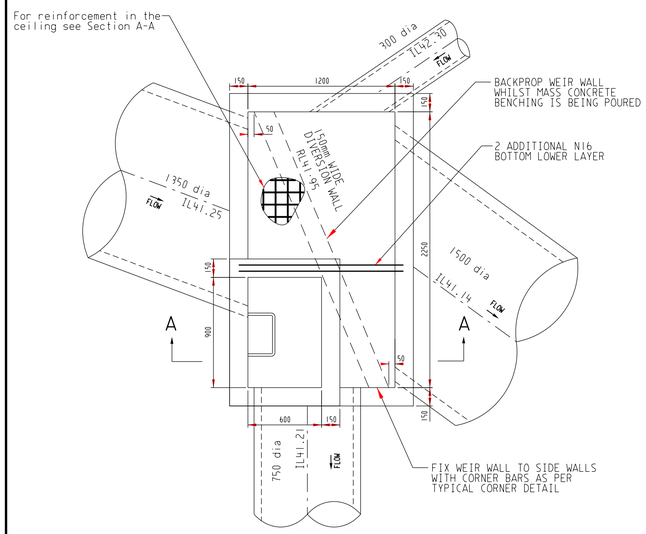

PLAN

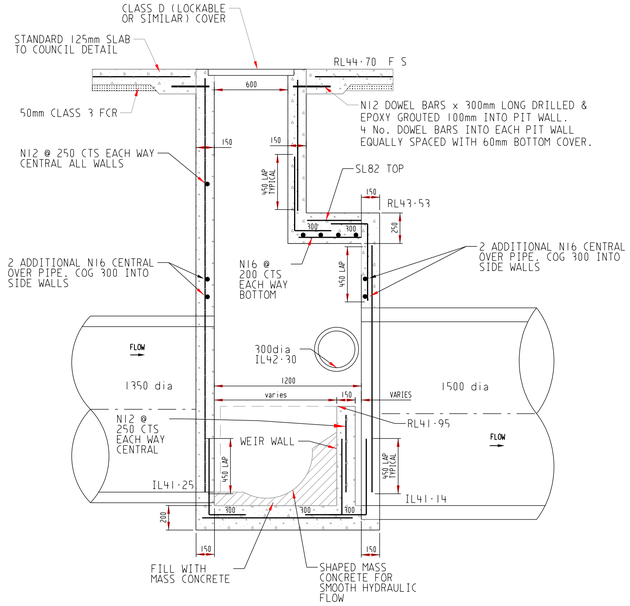

SECTION A-A

WEIR PIT 5 DETAIL

SCALE 1:25

(DIMENSIONS ARE IN MILLIMETRES)

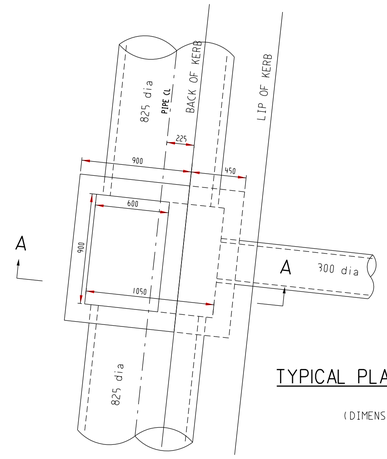

TYPICAL PLAN DETAIL - PITS 14 & 15

SCALE 1:25

(DIMENSIONS ARE IN MILLIMETRES)

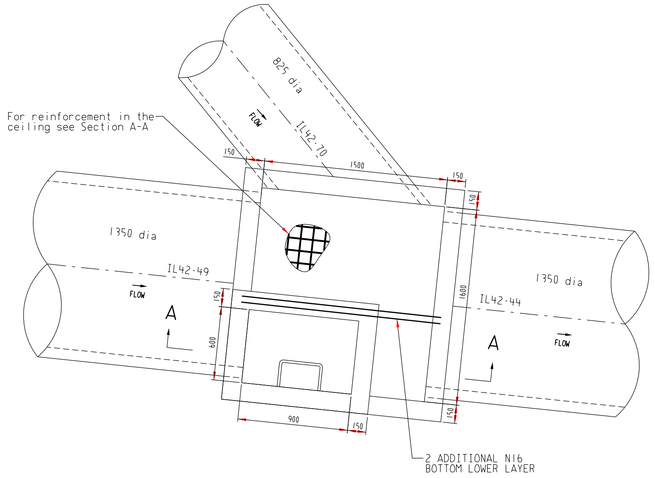

PLAN

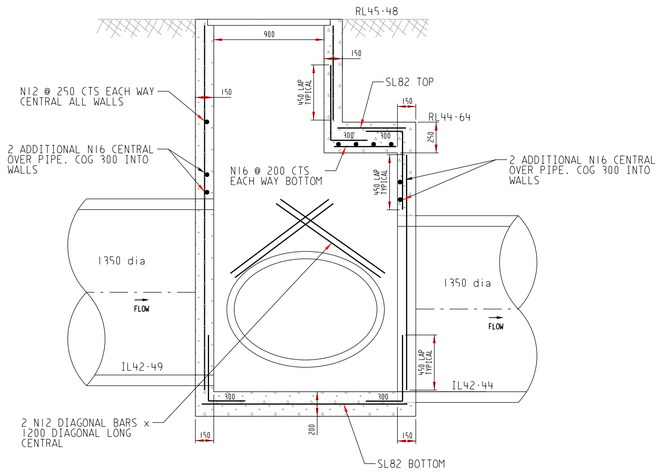

SECTION A-A

PIT 9 DETAIL

SCALE 1:25

(DIMENSIONS ARE IN MILLIMETRES)

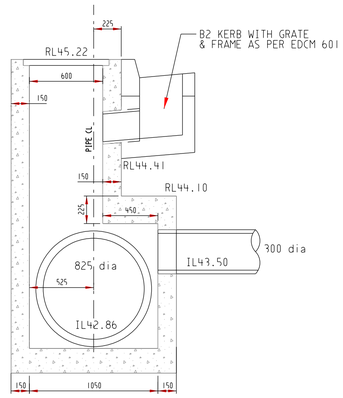

SECTION A-A: PIT 14

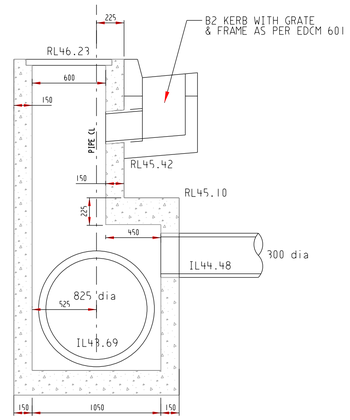

SECTION A-A: PIT 15

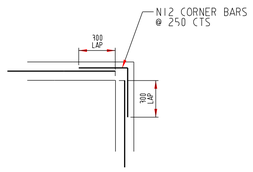

TYPICAL CORNER DETAIL

SCALE 1:25

(DIMENSIONS ARE IN MILLIMETRES)

PIT DETAIL NOTES

1. PIT TO BE CONSTRUCTED IN ACCORDANCE WITH SUBDIVISIONS IN GROWTH AREAS STANDARD DRAWING EDCM 605.
2. FOR REINFORCEMENT DETAILS REFER TO SUBDIVISIONS IN GROWTH AREAS STANDARD DRAWING EDCM 607 & AS NOTED ON PLANS & SECTIONS A-A.
3. CONCRETE BASE OF CHAMBER WILL BE HOMOGENEOUSLY POURED WITH WALLS.
4. MASS CONCRETE TO BE NEATLY SHAPED AND ROUNDED OFF AT JUNCTION OF THE PIPES TO FACILITATE SMOOTH HYDRAULIC FLOW

AS CONSTRUCTED

AMENDMENTS

VER.	DATE	REMARKS
D	23/07/19	DOWEL BARS & CLASS D COVER ADDED TO PIT 5 DETAIL
C	2/07/19	PIT 5 DETAIL REVISED
B	9/05/19	PIT 2 DETAIL REMOVED FROM STAGE WORKS
A	23/01/19	ISSUED FOR CONSTRUCTION

breese pitt dixon pty. ltd.
land surveyors civil engineers
1/19 cato street
hawthorn east, 3123
telephone 8823 2300
fax no. 8823 2310

MELWAY REF.	234-F-2
SURVEY	BPD
DESIGN	NC
DRAWN	NC
CHECKED	

RIVERDALE VILLAGE
STAGE 20

MUNICIPALITY: WYNDHAM

REFERENCE: 8554 E/20

SCALE AS SHOWN | DATUM AHD | DATE JUN'18 | SHEET 18 OF 21 | D

I:\H8554\ENGS\ST20\E20_R18_DRAWS.dgn

Plotted:23/07/2019

NOTES

a) ALL SIGNS TO BE SLEEVED USING A SL27 SLEEVE

b) BICYCLE LANES SHOWN SHADED TO BE COLOUR G13 EMERALD (AS2700 - 2011) COLOURED SURFACE TREATMENT

SIGNAGE LEGEND

A STREET SIGNS (2 No)

B ROAD CLOSED (G9-20) SIGN WITH OBSTRUCTION MARKER SIGN (D4-5) - CLASS 1 — ROAD CLOSED G9-20, D4-5

C GIVE WAY SIGN (R1-2A) - CLASS 1 — GIVE WAY R1-2

D SPEED HUMP SIGN (W5-10A) WITH SPEED ADVISORY SIGN (W8-2A) - ALL CLASS 1 — W5-10A, 20 km/h W8-2A

E BICYCLE PEDESTRIAN WARNING SIGN (W6-9A) WITH CROSSING ARROW SIGN (W8-23A) & ON SIDE ROAD SIGN (W8-3AL) BELOW. ALL CLASS 1. — W6-9, W8-23, ON SIDE ROAD W8-3

F BICYCLE PEDESTRIAN WARNING SIGN (W6-9A) WITH CROSSING ARROW SIGN (W8-23A) & ON SIDE ROAD SIGN (W8-3AR) BELOW. ALL CLASS 1. — W6-9, W8-23, ON SIDE ROAD W8-3

G NO STANDING SIGN R5-35(L) - CLASS 1

H NO STANDING SIGN R5-35(R) - CLASS 1

I BICYCLE PEDESTRIAN WARNING SIGN (W6-9) WITH CROSSING ARROW SIGN (W8-23A) BELOW- ALL CLASS 1. — W6-9, W8-23

NOTE: ALL SIGNAGE SHALL BE IN ACCORDANCE WITH AUSTRALIAN STANDARD (AS 1742.2-2009)

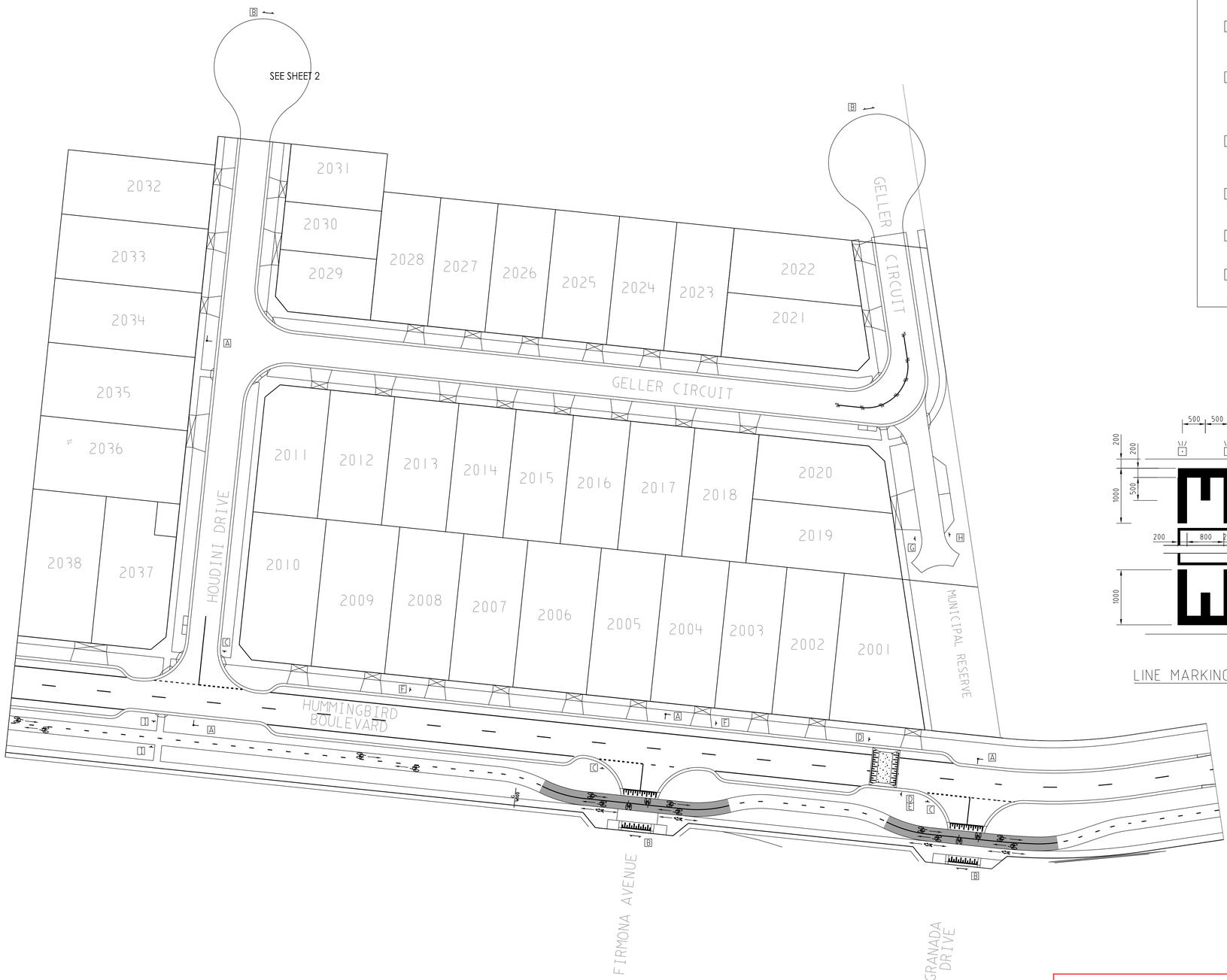

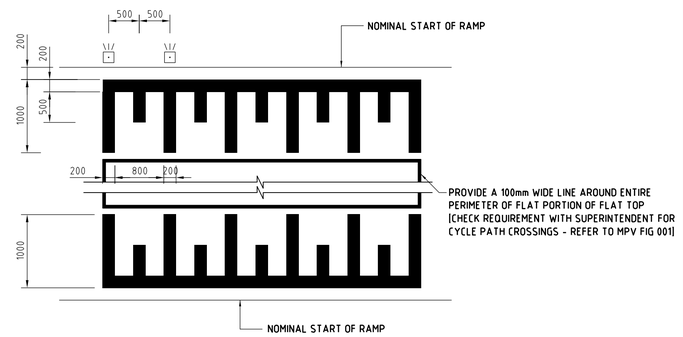

LINE MARKING FOR RAISED PAVEMENTS

NOT TO SCALE

AS CONSTRUCTED

SIGNAGE & LINEMARKING PLAN

SCALE 1:500

SCALE 1 : 500 @ A1

10 5 0 10 20 40

AMENDMENTS			
D	25/05/20	SIGNS J REMOVED	
C	20/05/20	SIGNS J MOVED, BIKE PATH PAINT EXTENDED PAST BUS STOP	
B	13/05/20	SIGN J & NOTES ADDED	
A	23/01/19	ISSUED FOR CONSTRUCTION	
VER.	DATE	REMARKS	

breese pitt dixon pty. ltd.
land surveyors civil engineers
1/19 cato street
hawthorn east, 3123
telephone 8823 2300
fax no. 8823 2310

MELWAY REF.	234-F-2
SURVEY	BPD
DESIGN	NC
DRAWN	NC
CHECKED	

RIVERDALE VILLAGE
STAGE 20

MUNICIPALITY: WYNDHAM

REFERENCE: 8554 E/20

SCALE AS SHOWN | DATUM AHD | DATE JUN'18 | SHEET 19 OF 21 | D

I:\W8554\ENG\STG20\E20_R19_SIGN.dgn

Plotted:25/05/2020

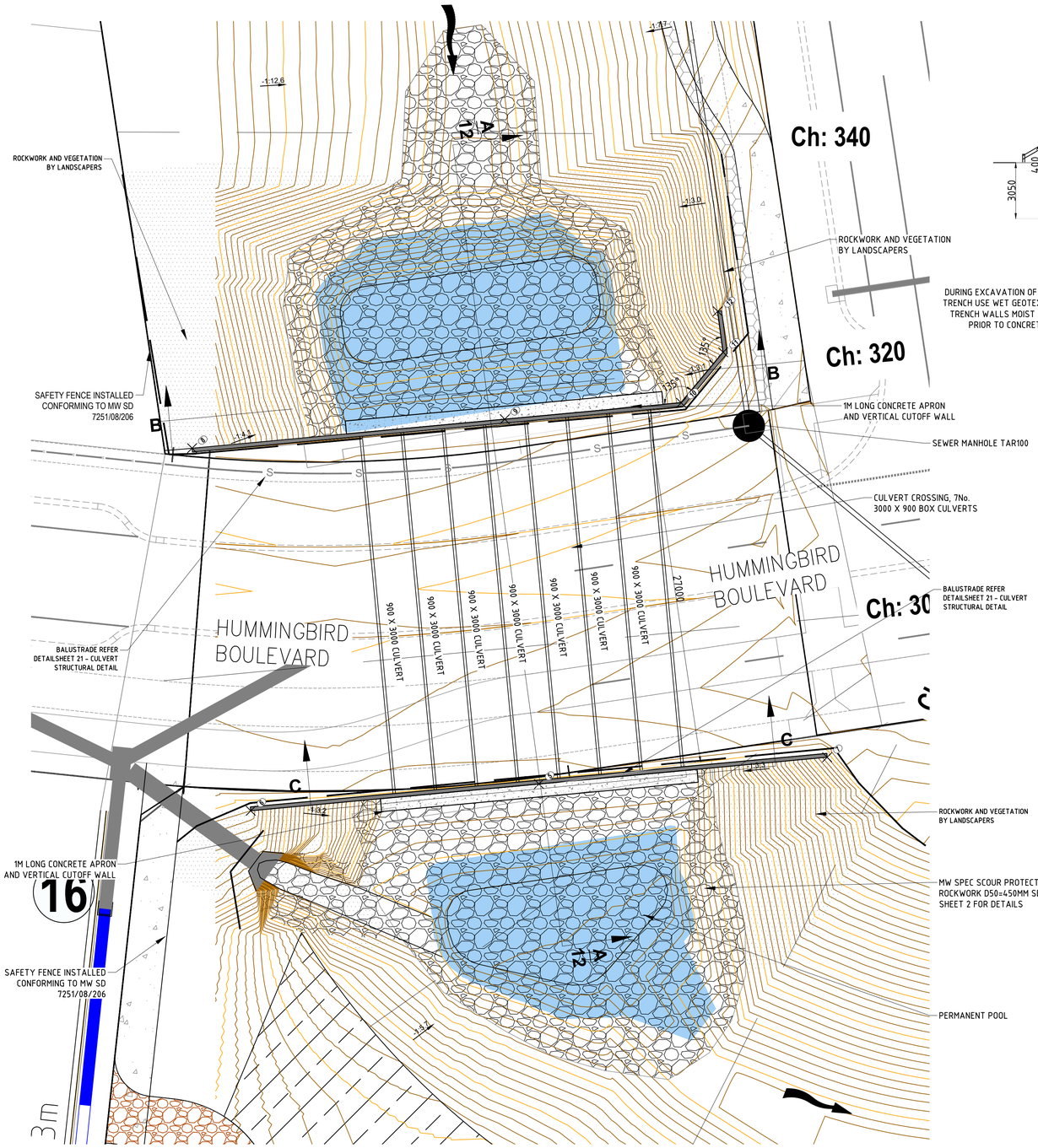

CULVERT DETAIL PLAN

SCALE 1:200

0 2 4 6 8 10m
1:200 (A1)

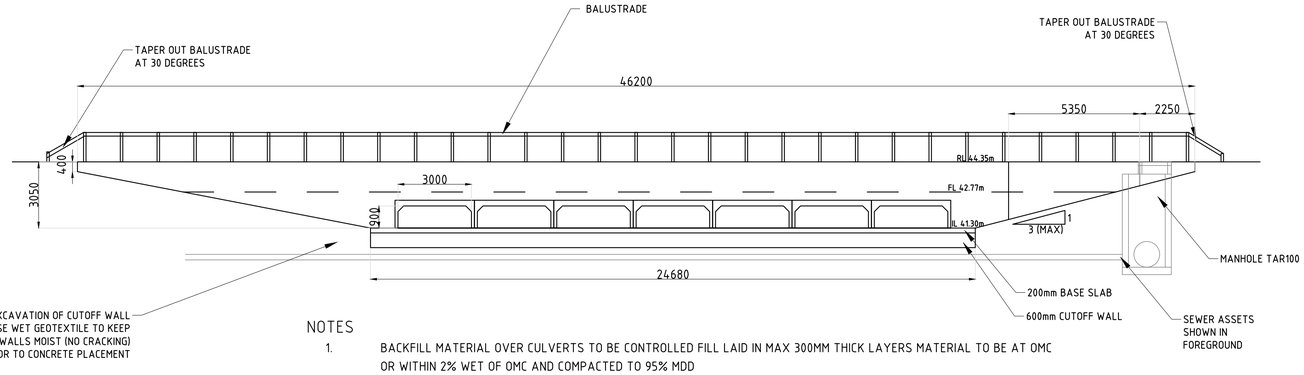

NOTES

1. BACKFILL MATERIAL OVER CULVERTS TO BE CONTROLLED FILL LAID IN MAX 300MM THICK LAYERS MATERIAL TO BE AT OMC OR WITHIN 2% WET OF OMC AND COMPACTED TO 95% MDD

CULVERT INLET CROSS SECTION B-B

SCALE 1 IN 125

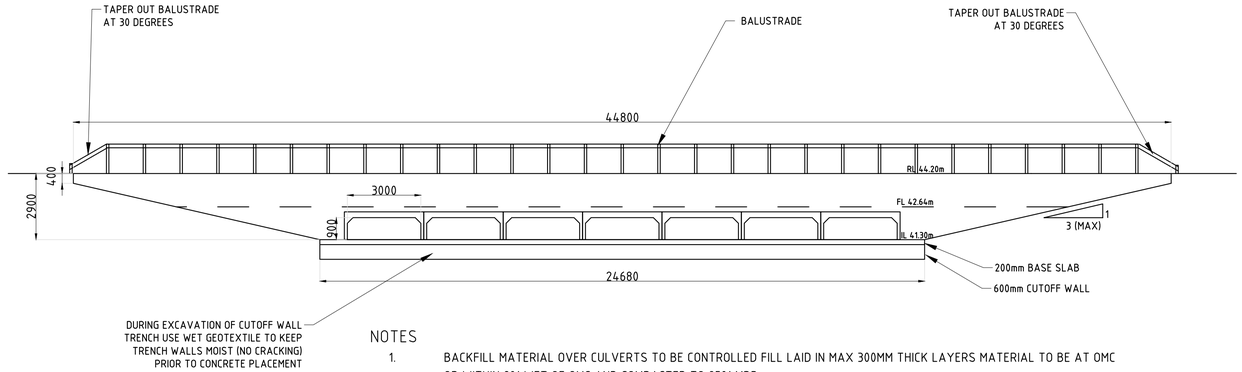

NOTES

1. BACKFILL MATERIAL OVER CULVERTS TO BE CONTROLLED FILL LAID IN MAX 300MM THICK LAYERS MATERIAL TO BE AT OMC OR WITHIN 2% WET OF OMC AND COMPACTED TO 95% MDD

CULVERT OUTLET CROSS SECTION C-C

SCALE 1 IN 125

0 1.25 2.5 3.75 5 6.25m
1:125 (A1)

CULVERT SET OUT

POINT	NORTHING	EASTING
5	409.54	375.83
6	407.47	353.53
7	411.62	398.13
8	435.53	348.99
9	437.78	373.18
10	439.05	386.83
11	442.96	390.08
12	446.13	389.66

LEGEND

- Minor Contour 0.20m
- Major Contour 1.00m
- 1 YEAR FLOOD LEVEL
- 10 YEAR FLOOD LEVEL
- 100 YEAR FLOOD LEVEL
- CULVERT WING WALL
- ROCK TYPE 1
- ROCK TYPE 2
- SEDIMENT DRYING AREA
- SEDIMENT POND ACCESS TRACK 200mm FCR
- OPEN WATER
- VEGETATED SAFETY BENCH
- SHARED PATH
- ROCKWORK AND VEGETATION BY LANDSCAPERS

AS CONSTRUCTED

AMENDMENTS			
D	JAN/2020	SCALE BAR MODIFIED TO DISPLAY CORRECLY	
C	OCT/19	CULVERT SETOUT DETAILS INCLUDED	
B	27/02/19	LEGEND UPDATED TO INCLUDE CULVERT WING WALL	
A	23/01/19	ISSUED FOR CONSTRUCTION	
VER.	DATE	REMARKS	

breese pitt dixon pty. ltd.
land surveyors civil engineers
1/19 cato street
hawthorn east, 3123
telephone 8823 2300
fax no. 8823 2310

MELWAY REF. 234-F-2
SURVEY BPD
DESIGN NC
DRAWN NC
CHECKED

RIVERDALE VILLAGE STAGE 20

MUNICIPALITY: WYNDHAM
REFERENCE: 8554 E/20

SCALE AS SHOWN | DATUM AHD | DATE JAN'2020 | SHEET 20 OF 21 | D

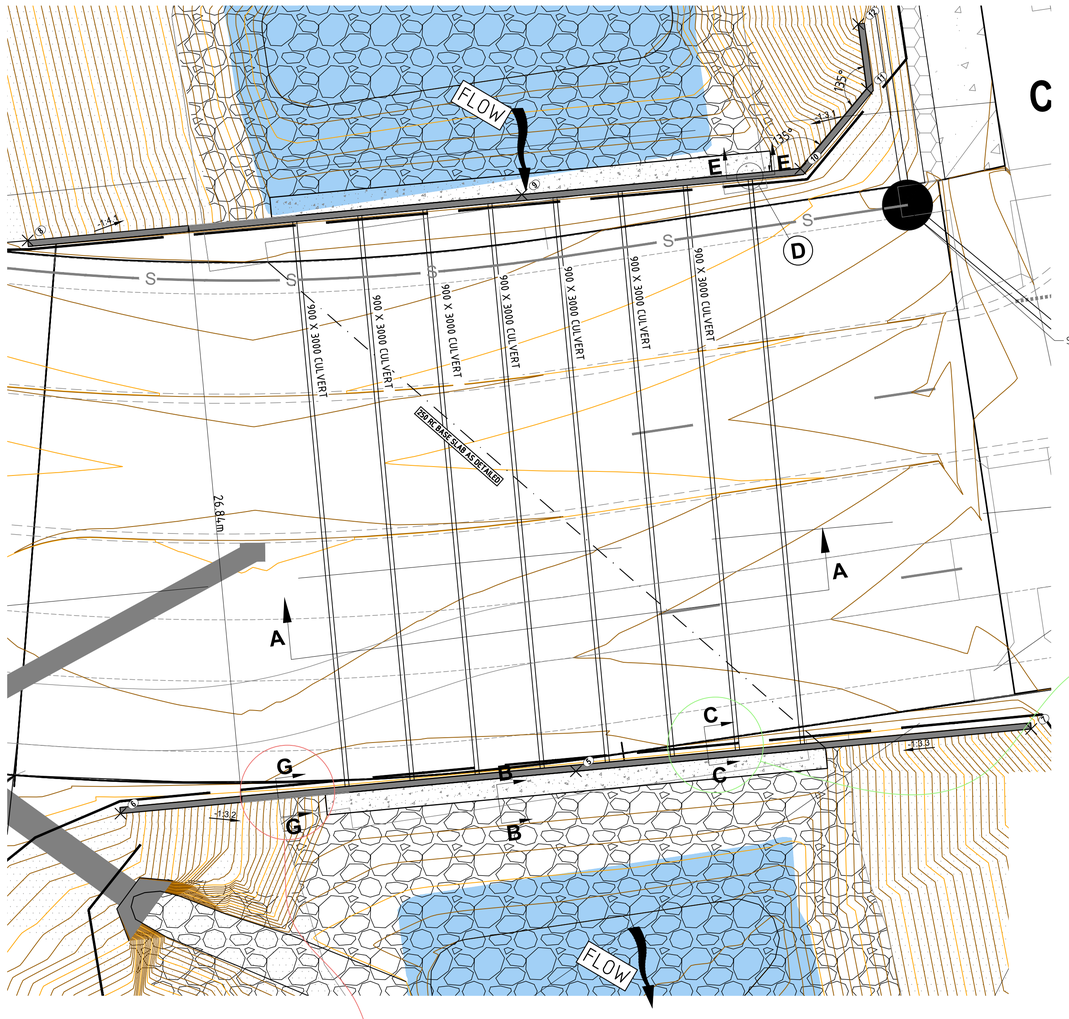

CULVERT DETAIL PLAN

SCALE 1:150

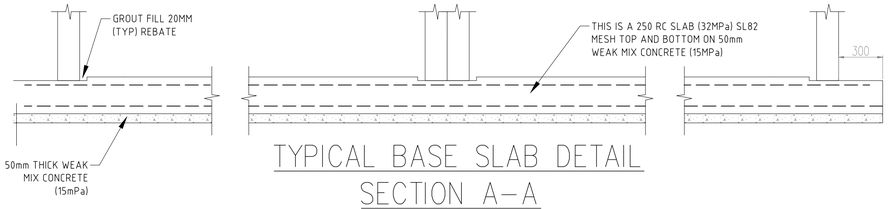

TYPICAL BASE SLAB DETAIL

SECTION A–A

SCALE 1:50

BASE SLAB TO BE FOUNDED ON SOLID CONTINUOUS BASALT WITH SAFE BEARING CAPACITY OF 400KPa IF DIFFERING GROUND CONDITIONS ARE ENCOUNTERED THE CONTRACTOR IS TO CONSULT THE SUPERVISING ENGINEER BEFORE PROCEEDING. ALL REMAINING UNDULATIONS IN THE ROCK SURFACE ARE TO BE FILLED WITH WEAK MIX CONCRETE. SLAB TO BE CURED FOR A MIN OF 7 DAYS AFTER POURING.

NOTES.

1. ALL DIMENSIONS RELEVANT TO SETTING OUT OFF–SITE WORK SHALL BE VERIFIED BY THE CONTRACTOR BEFORE CONSTRUCTION AND FABRICATION IS COMMENCED. THE ENGINEERS DRAWINGS SHALL NOT BE SCALED.
2. DURING CONSTRUCTION THE CONTRACTOR IS RESPONSIBLE FOR MAINTAINING THE STRUCTURE IN A SAFE AND STABLE CONDITION AND ENSURING NO PART SHALL BE OVERSTRESSED UNDER CONSTRUCTION ACTIVITIES.
3. ALL DIMENSIONS ARE IN MILLIMETRES UNLESS STATED OTHERWISE. ALL LEVELS ARE EXPRESSED IN METRES TO AHD.
4. CONSTRUCTION JOINTS SHALL BE PROPERLY FORMED AND USED ONLY WHERE SHOWN OR SPECIFICALLY APPROVED BY THE ENGINEER.
5. REINFORCEMENT IS REPRESENTED DIAGRAMMATICALLY AND NOT NECESSARILY SHOWN IN TRUE PROPORTION.
6. ALL REINFORCEMENT SHALL BE SUPPORTED IN ITS CORRECT POSITION DURING PLACEMENT OF CONCRETE BY APPROVED BAR CHAIRS, SPACERS OR SUPPORT BARS.
7. ALL CONCRETE SHALL BE COMPACTED WITH THE AID OF IMMERSION VIBRATORS OR WITH OTHER VIBRATING EQUIPMENT AS MAY BE DIRECTED BY THE ENGINEER.
8. ALL CONCRETE CORNERS SHALL HAVE A 20mm X 20mm FILLET OR CHAMFER UNLESS NOTIFIED OTHERWISE.
9. WORKMANSHIP AND MATERIALS ARE TO BE IN ACCORDANCE WITH THE RELEVANT CURRENT SAA CODES INDICATING ALL AMENDMENTS EXCEPT WHERE VARIED BY THE CONTRACT DOCUMENTS.
10. ALL WORKS TO BE CARRIED OUT IN ACCORDANCE WITH MELBOURNE WATER SPECIFICATIONS.
11. MELBOURNE WATER CONTRACT SUPERVISOR TO BE NOTIFIED 48 HOURS PRIOR TO COMMENCEMENT OF WORKS.
12. SAFETY FENCE TO BE CONSTRUCTED IN ACCORDANCE WITH MELBOURNE WATER STANDARD DRAWING 7251/4/204. HEAVY GALVANISED CHAIN WIRE MESH IS TO BE USED.
13. BACKFILL WITHIN EXISTING AND PROPOSED ROAD PAVEMENTS TO BE 20mm (CLASS 3) FCR TO LEVELS INDICATED ON DRAWINGS.
14. ALL REFILL MATERIAL WITHIN THE ROAD RESERVE TO BE COMPACTED UNTIL THE DRY DENSITY IS IN EXCESS OF 98% OF THE MAXIMUM DRY DENSITY OBTAINED FROM THE STANDARD COMPACTION TEST AS PER AS 1289.
15. THE CONTRACTOR IS RESPONSIBLE FOR ENSURING THAT ALL IMPORTED FILL MATERIAL, INCLUDING TOPSOIL, SATISFIES THE DESCRIPTION FOR CLEAN FILL MATERIAL IN EPA BULLETIN PUBLICATION No. 448 (SEPT '95) AND SUBSEQUENT REVISIONS. THE CONTRACTOR SHALL PROVIDE VERIFICATION INCLUDING TEST CERTIFICATES TO THE SUPERVISING ENGINEER.
16. THE CONTRACTOR MUST COMPLETE A LEVEL CHECK BETWEEN ALL TBM'S TO VERIFY LEVEL VALUES BEFORE COMMENCEMENT OF WORKS. ALL TBM.s AND CONTROL POINTS ARE TO BE MAINTAINED AND PROTECTED AT ALL TIMES DURING CONSTRUCTION. SHOULD ANY MARKS BE DISTURBED, THE CONTRACTOR WILL IMMEDIATELY NOTIFY THE CONSULTANT TO ARRANGE RE–INSTATEMENT AT THE CONTRACTORS EXPENSE.
17. MINIMUM COVER TO REINFORCEMENT TO BE 60MM UNLESS NOTED OTHERWISE
18. ALL CONCRETE TO BE 32MPA UNLESS NOTED OTHERWISE

STRUCTURAL DETAIL OF WINGWALL OVER CULVERT

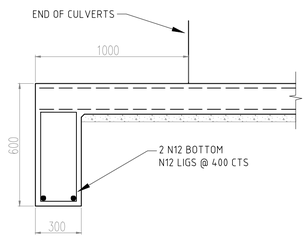

TYPICAL BASE SLAB CUT–OFF AND APRON DETAIL

SECTION B–B

SCALE 1:20

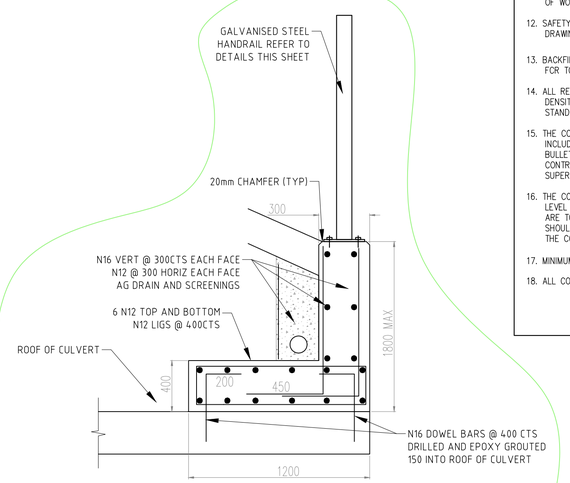

TYPICAL END WALL OVER CULVERTS

SECTION C–C

SCALE 1:20

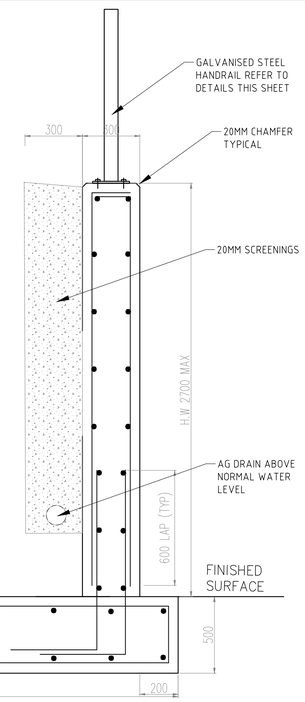

STRUCTURAL DETAIL OF WINGWALL CLEAR OF CULVERTS HEIGHTS 500mm TO 2700mm

TYPICAL WING WALL SECTION G–G

SCALE 1:20

WING WALL SCHEDULE					
WALL			FOOTING		
H.W (mm)	VERTICAL REBAR	HORIZONTAL REBAR	LB (mm)	LIGATURES	DISTRIBUTION REBAR
500-1000	N12 @ 300 CTS	N12 @ 300 CTS	750	N12 @ 300 CTS	N12 @ 300 CTS
1000-1500	N12 @ 200 CTS	N12 @ 300 CTS	1200	N12 @ 300 CTS	N12 @ 300 CTS
1500-2000	N16 @ 200 CTS	N12 @ 300 CTS	1800	N12 @ 200 CTS	N12 @ 300 CTS
2000-2700	N16 @ 150 CTS	N12 @ 300 CTS	2400	N12 @ 150 CTS	N12 @ 300 CTS

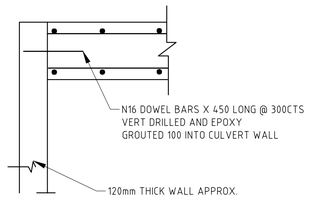

TYPICAL BOX CULVERT TO WING WALL JUNCTION PLAN DETAIL D

SCALE 1:20

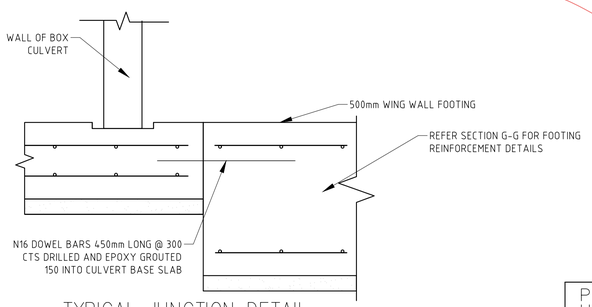

TYPICAL JUNCTION DETAIL

CULVERT BASE TO WING WALL SECTION E–E

SCALE 1:10

PREPARED BASE UNDER FOOTING TO HAVE MINIMUM 150kPa BEARING CAPACITY

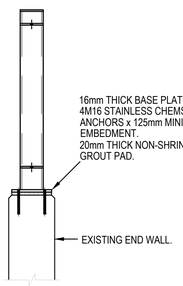

TYPICAL POST SECTION

SCALE 1:20

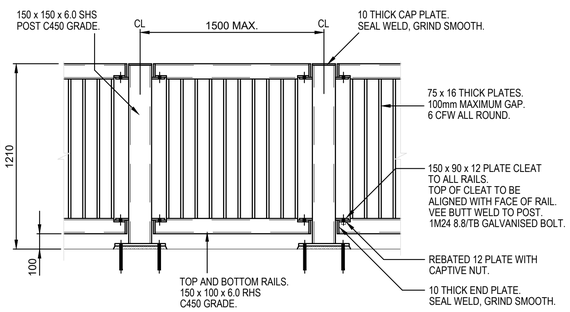

TYPICAL BARRIER PANEL (BALUSTRADE) ELEVATION

SCALE 1:20

BALUSTRADE COMPONENTS TO BE HOT DIP GALVANISED AFTER FABRICATION.

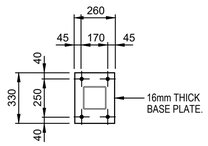

BASE PLATE DETAIL

SCALE 1:20

AS CONSTRUCTED

AMENDMENTS			
E	JAN/2020	SCALE BAR MODIFIED TO DISPLAY CORRECLY	
D	08/10/19	END WALL SECTION C–C DETAIL AMENDED	
C	04/06/19	WING WALL ON EASTERN SIDE CHANGE ANGLE	
B	27/02/19	LEGEND UPDATED TO INCLUDE CULVERT WING WALL	
A	23/01/19	ISSUED FOR CONSTRUCTION	
VER.	DATE	REMARKS	

breese pitt dixon pty. ltd.
land surveyors civil engineers
1/19 cato street
hawthorn east, 3123
telephone 8823 2300
fax no. 8823 2310

MELWAY REF. 234–F–2
SURVEY BPD
DESIGN NC
DRAWN NC
CHECKED

RIVERDALE VILLAGE
STAGE 20

MUNICIPALITY: WYNDHAM
REFERENCE: 8554 E/20

SCALE AS SHOWN | DATUM AHD | DATE JAN'2020 | SHEET 21 OF 21 | E